ABB MEASUREMENT & ANALYTICS

Web Tension Systems with Tension Electronics PFEA 111/112/122

User Manual

3BSE029380R0201 en Rev A

Use of **DANGER**, **WARNING**, **CAUTION**, and **NOTE**

This publication includes, **DANGER**, **WARNING**, **CAUTION** and **NOTE** information where appropriate to point out safety related or other important information.

DANGER	Hazards which could result in severe personal injury or death
WARNING	Hazards which could result in personal injury
CAUTION	Hazards which could result in equipment or property damage
NOTE	Alerts user to pertinent facts and conditions

Although **DANGER** and **WARNING** hazards are related to personal injury, and **CAUTION** hazards are associated with equipment or property damage, it should be understood that operation of damaged equipment could, under certain operational conditions, result in degraded process performance leading to personal injury or death. Therefore, comply fully with all **DANGER**, **WARNING**, and **CAUTION** notices.

TRADEMARKS

Pressductor® is a registered trademark of ABB AB.

NOTICE

The information in this document is subject to change without notice and should not be construed as a commitment by ABB AB. ABB AB assumes no responsibility for any errors that may appear in this document.

In no event shall ABB AB be liable for direct, indirect, special, incidental or consequential damages of any nature or kind arising from the use of this document, nor shall ABB AB be liable for incidental or consequential damages arising from use of any software or hardware described in this document.

This document and parts thereof must not be reproduced or copied without ABB AB's written permission, and the contents thereof must not be imparted to a third party nor be used for any unauthorized purpose.

The software described in this document is furnished under a license and may be used, copied, or disclosed only in accordance with the terms of such license.

CE and UK regulations marking

Provided that the installation is carried out in accordance with the installation instructions given in this manual this product meets the requirements for CE-marking specified in: the RoHS directive 2011/65/EU + AD 2015/863/EU, EMC directive 2014/30/EU and the Low Voltage Directive 2014/35/EU and Conformity to UK regulations: The Electrical Equipment (Safety) Regulations 2016, S.I.2016:1101, The Electromagnetic Compatibility Regulations 2016, S.I.2016:1091 and The Restriction of the Use of Certain Hazardous Substances in Electrical and Electronic Equipment Regulations 2012, S.I. 2012:3032.

The Tension Electronics PFEA111-20, PFEA111-65 and PFEA112-20 fulfill the requirements of safety approval for USA and Canada according to the standard UL61010C-1 for Process Control Equipment and CSA C22.2 No. 1010-1 Safety Requirements for Measurement, Control and Laboratory Use, Part 1: General Requirements Certificate No. 170304-E240621 and No. 240504-E240621, provided that the installation is carried out in accordance with the installation instructions given in Chapter 2 Installation, included in this User Manual.

Copyright © ABB AB, 2004-2023.

3BSE001264/B

Template: 3BSE001286/D

3BSE029380R0201 Rev A

TABLE OF CONTENTS

Chapter 1 - Introduction

1.1 About this Manual 1-1
1.2 Cyber security disclaimer 1-1
1.3 Cyber security for PFEA 1-1
1.4 China RoHS Marking 1-2
1.5 WEEE: Waste Electrical and Electronic Equipment 1-3
1.6 How to Use this Manual 1-3
1.6.1 Getting Started 1-4
1.6.2 Saving Actual Data and Settings at Commissioning 1-4
1.7 About this System 1-5
1.8 Safety Instructions 1-7
1.8.1 Personnel Safety 1-7
1.8.2 Equipment Safety 1-7
1.9 The Measuring Technique Based on Pressductor® Technology 1-8

Chapter 2 - Installation

2.1 About this Chapter 2-1
2.2 Safety Instructions 2-1
2.3 Mounting the Load Cells 2-1
2.4 Installing the Electronic Unit 2-2
2.4.1 Selecting and Routing the Cabling 2-2
2.4.1.1 Recommended Cabling 2-2
2.4.1.2 Interference 2-4
2.4.1.3 Synchronization 2-4
2.4.2 Mounting the Tension Electronics PFEA111/112/122 2-5
2.4.2.1 IP 65-version (NEMA 4) 2-5
2.4.2.2 IP 20-version (Unsealed) 2-7
2.4.3 Earthing 2-9
2.5 Installing MNS Select Floor Cabinet 2-10
2.5.1 Mounting Cabinets Together 2-10
2.5.2 Mounting Cabinets to the Floor 2-10
2.5.3 Space Requirements 2-11
2.6 Installing Junction Box PFXC 141 2-12
2.7 Connecting the Load Cells 2-13
2.8 Connecting Optional Units 2-14
2.8.1 Insulation Amplifier PXUB 201 (only for the IP 20-version) 2-14
2.8.2 Power Supply Unit SD83x 2-14

Chapter 3 - Commissioning

3.1 About this Chapter 3-1
3.2 Safety Instructions 3-1
3.3 Necessary Equipment and Documentation 3-1

CONTENTS (continued)

3.4 Using the Panel Buttons 3-2
3.4.1 Navigating and Confirming 3-2
3.4.2 Changing Numerical Values and Parameters 3-2
3.5 Menu Overview 3-3
3.6 Step-by-step Commissioning Guide 3-4
3.7 Performing Basic Settings 3-5
3.8 Performing a Fast Setup 3-5
3.8.1 Performing Fast Setup using Hanging Weights 3-6
3.8.2 Performing Fast Setup using Wrap Gain 3-8
3.9 Checking Load Cell Signal Polarity 3-9
3.10 Checking Load Cell Function 3-9
3.11 Performing a Complete Setup 3-10
3.11.1 Overview 3-10
3.12 Complete Setup Sequence 3-11
3.12.1 Presentation Menu 3-11
3.12.1.1 Set Language 3-11
3.12.1.2 Set Unit 3-11
3.12.1.3 Set Web Width 3-12
3.12.1.4 Set Decimals 3-12
3.12.2 Set Object 3-13
3.12.3 Nominal Load 3-14
3.12.4 Zero Set 3-15
3.12.5 Set Wrap Gain 3-16
3.12.6 Voltage Output 3-18
3.12.7 Current Output 3-20
3.12.8 Miscellaneous Menu 3-22
3.12.9 Service Menu 3-23
3.12.9.1 Maximum Load / Present Offset 3-24
3.12.9.2 Reset A/B 3-24
3.12.9.3 Simulation function 3-24
3.13 PROFIBUS DP Communication with PFEA112 3-25
3.13.1 General Data about PROFIBUS DP 3-25
3.13.2 Master-slave Communication 3-25
3.13.3 PROFIBUS Physical Media 3-26
3.13.4 Commands through PROFIBUS 3-27
3.13.5 Handling of Measurement Data through PROFIBUS 3-28
3.13.5.1 Miscellaneous Menu PFEA112 3-28
3.13.5.2 Scaling of PROFIBUS Measuring Values 3-29
3.13.5.3 Filtering of PROFIBUS Measuring Values 3-30
3.13.5.4 Input Buffer, Communication Block from PFEA112 to PLC 3-31
3.13.5.5 Output Buffer, Communication Block from PLC to PFEA112 3-31

CONTENTS (continued)

3.14 PROFINET Communication with PFEA122 ... 3-32
3.14.1 General Data about PROFINET ... 3-32
3.14.2 PROFINET properties of PFEA ... 3-32
3.14.3 Plant Integration ... 3-33
3.14.3.1 Data to and from PFEA ... 3-33
3.14.3.2 Integration example ... 3-35
3.14.4 Miscellaneous Menu PFEA122 ... 3-36
3.14.4.1 Fieldbus ... 3-37
3.14.5 Commissioning PFEA122 on PROFINET ... 3-37
3.15 Commissioning of Optional Units ... 3-38
3.15.1 Insulation Amplifier PXUB 201 ... 3-38

Chapter 4 - Operation

4.1 About this Chapter ... 4-1
4.2 Safety Instructions ... 4-1
4.3 Operating Devices ... 4-1
4.4 Start-up and shut-down ... 4-2
4.4.1 Start-up ... 4-2
4.4.2 Shut-down ... 4-2
4.5 Normal Run ... 4-2
4.6 Measuring values on the display ... 4-3
4.7 Operator Menus ... 4-4
4.7.1 Web Tension ... 4-5
4.7.1.1 Standard Roll (two load cells) ... 4-5
4.7.1.2 Single Side A or Single Side B measurement (one load cell) ... 4-5
4.7.2 Error and Warning Messages ... 4-5

Chapter 5 - Maintenance

5.1 About this Chapter ... 5-1
5.2 Preventive Maintenance ... 5-1
5.3 PFEA122 Firmware update ... 5-1
5.3.1 Connection of PFEA122 Field Update Tool ... 5-2
5.3.2 Installation of the Field Update Tool ... 5-4
5.3.3 Startup of the PFEA122 USB-EMMC Firmware update application ... 5-7
5.3.4 Update of the PFEA122 application Firmware with Field update Tool ... 5-9
5.3.5 Firmware manual update ... 5-10

Chapter 6 - Fault-tracing

6.1 About this Chapter ... 6-1
6.2 Safety Instructions ... 6-1
6.3 Interchangeability ... 6-2

CONTENTS (continued)

6.4 Necessary Equipment and Documentation 6-2
6.5 Fault-tracing Procedure 6-3
6.6 Error and Warning Messages in PFEA111/112/122 6-4
6.6.1 Error Messages 6-4
6.6.2 Warning Messages 6-4
6.7 Fault Symptoms and Measures 6-5
6.8 Warnings and Errors Detected by the Tension Electronics 6-7
6.8.1 Errors 6-7
6.8.1.1 Flash Memory Error 6-7
6.8.1.2 EEPROM Memory Error 6-7
6.8.1.3 Supply Error 6-7
6.8.1.4 Load Cell Excitation Error 6-8
6.8.2 Warnings 6-8
6.8.2.1 PROFIBUS Communication Problem 6-8
6.8.2.2 PROFINET Communication Problem 6-8
6.8.2.3 Synchronization Problem 6-8
6.8.3 Changing to Single Side Measurement If One Load Cell Is Faulty 6-9
6.9 Changing Load Cells 6-10

Appendix A - Technical Data for Tension Electronics PFEA111/112/122

A.1 About this Appendix A-1
A.2 Definitions used in the Web Tension Systems A-2
A.2.1 Coordinate System A-3
A.3 Technical Data A-4
A.4 Factory Default Settings A-7
A.5 Optional Units A-9
A.5.1 Insulation Amplifier PXUB 201 ..... A-9
A.5.2 Power Supply Unit SD83x A-10
A.5.3 Junction Box PFXC 141 ..... A-10
A.6 Drawings A-11
A.6.1 Dimension Drawing 3BSE017052D64, Rev. D A-11
A.6.2 Dimension Drawing 3BSE029997D0064, Rev. A A-12
A.7 PROFIBUS DP - GSD File for PFEA112 ..... A-13
A.8 PROFINET - GSDML File for PFEA122 ..... A-16

Appendix B - PFCL 301E - Designing the Load Cell Installation

B.1 About This Appendix B-1
B.2 Basic Application Considerations B-1

CONTENTS (continued)

B.3 Step-by-Step Guide for Designing the Load Cell Installation B-2
B.4 Installation Requirements B-3
B.5 Mounting Alternatives, Calculating Force and Calculating Wrap Gain B-4
B.5.1 Horizontal Mounting B-4
B.5.2 Inclined Mounting B-5
B.6 Force Calculation for Measurement with a Single Load Cell B-6
B.6.1 The Most Common and Simple Solution B-6
B.6.2 Force Calculation when the Web is not Centered on the Roll B-7
B.7 Mounting the Load Cells B-8
B.7.1 Routing the Load Cell Cable B-8
B.7.2 Connecting the Load Cell Extension Cable B-8
B.8 Technical Data B-9
B.9 Cable Diagram 3BSE028140D0065, page 2/5, Rev. D B-11
B.10 Mounting Instruction, Cable Connector, 3BSE019064, Rev. A B-12
B.11 Dimension Drawing, 3BSE015955D0094, Rev. D B-13
B.12 Assembly Drawing, 3BSE015955D0096, Rev. C B-14

Appendix C - PFTL 301E - Designing the Load Cell Installation

C.1 About This Appendix C-1
C.2 Basic Application Considerations C-1
C.3 Step-by-Step Guide for Designing the Load Cell Installation C-2
C.4 Installation Requirements C-3
C.5 Mounting Alternatives, Calculating Force and Calculating Wrap Gain C-4
C.5.1 Horizontal Mounting C-4
C.5.2 Inclined Mounting C-5
C.6 Force Calculation for Measurement with a Single Load Cell C-6
C.6.1 The Most Common and Simple Solution C-6
C.6.2 Force Calculation when the Web is not Centered on the Roll C-7
C.7 Mounting the Load Cells C-8
C.7.1 Routing the Load Cell Cable C-8
C.7.2 Connecting the Load Cell Extension Cable C-8
C.8 Technical Data C-9
C.9 Cable Diagram 3BSE028140D0065, Page 1/5, Rev. D C-11
C.10 Mounting Instruction, Cable Connector, 3BSE019064, Rev. A C-12
C.11 Dimension Drawing, 3BSE019040D0094, Rev. C C-13
C.12 Assembly Drawing, 3BSE019040D0096, Rev. C C-14

Appendix D - PFRL 101 - Designing the Load Cell Installation

D.1 About This Appendix D-1
D.2 Basic Application Considerations D-1
D.3 Step-by-Step Guide for Designing the Load Cell Installation D-2
D.4 Installation Requirements D-3
D.5 Load Cell Orientation Depending on Measurement Direction D-4

CONTENTS (continued)

D.6 Mounting Alternatives, Calculating Force and Calculating Wrap Gain D-5
D.6.1 Horizontal Mounting D-5
D.6.2 Inclined Mounting D-6
D.7 Force Calculation for Measurement with a Single Load Cell D-7
D.7.1 The Most Common and Simple Solution D-7
D.7.2 Force Calculation when the Web is not Centered on the Roll D-8
D.8 Mounting the Load Cells D-9
D.8.1 Mounting with Brackets D-11
D.8.2 Mounting Screws for the Load Cells D-12
D.8.3 Routing the Load Cell Cable D-12
D.9 Technical Data D-13
D.10 Cable Diagram, 3BSE028140D0065, Page 3/5, Rev. D D-15
D.11 Cable Diagram, 3BSE028140D0065, Page 4/5, Rev. D D-16
D.12 Dimension Drawing 3BSE004042D0003, page 1/2, Rev. O D-17
D.13 Dimension Drawing, 3BSE004042D0003, page 2/2, Rev. O D-18
D.14 Dimension Drawing, 3BSE026314, Rev. - D-19
D.15 Dimension Drawing, 3BSE027249, Rev. - D-20
D.16 Dimension Drawing, 3BSE004042D0066, Rev. - D-21
D.17 Dimension Drawing, 3BSE004042D0065, Rev. - D-22
D.18 Dimension Drawing, 3BSE010457, Rev. B D-23

Appendix E - PFTL 101 - Designing the Load Cell Installation

E.1 About This Appendix E-1
E.2 Basic Application Considerations E-1
E.3 Step-by-Step Guide for Designing the Load Cell Installation E-2
E.4 Installation Requirements E-3
E.5 Mounting Alternatives, Calculating Force and Calculating Wrap Gain E-4
E.5.1 Horizontal Mounting E-4
E.5.2 Inclined Mounting E-5
E.6 Force Calculation for Measurement with a Single Load Cell E-6
E.6.1 The Most Common and Simple Solution E-6
E.6.2 Force Calculation when the Web is not Centered on the Roll E-7
E.7 Mounting the Load Cells E-8
E.7.1 Routing the Load Cell Cable E-9
E.8 Technical Data E-10
E.9 Cable Diagram 3BSE028140D0065, Page 3/5, Rev. D E-12
E.10 Cable Diagram 3BSE028140D0065, Page 4/5, Rev. D E-13
E.11 Cable Diagram 3BSE028140D0065, Page 5/5, Rev. D E-14
E.12 Dimension Drawing, 3BSE004171, Rev. B E-15

CONTENTS (continued)

E.13 Dimension Drawing, 3BSE004995, Rev. C E-16
E.14 Dimension Drawing, 3BSE023301D0064, Rev. B E-17
E.15 Dimension Drawing, 3BSE004196, Rev. C E-18
E.16 Dimension Drawing, 3BSE004999, Rev. C E-19
E.17 Dimension Drawing, 3BSE023223D0064, Rev. B E-20
E.18 Dimension Drawing, 3BSE012173, Rev. F E-21
E.19 Dimension Drawing, 3BSE012172, Rev. F E-22
E.20 Dimension Drawing, 3BSE012171, Rev. F E-23
E.21 Dimension Drawing, 3BSE012170, Rev. F E-24

Appendix F - PFCL 201 - Designing the Load Cell Installation

F.1 About This Appendix F-1
F.2 Basic Application Considerations F-1
F.3 Step-by-Step Guide for Designing the Load Cell Installation F-2
F.4 Installation Requirements F-3
F.5 Mounting Alternatives, Calculating Force and Calculating Wrap Gain F-4
F.5.1 Horizontal Mounting F-4
F.5.2 Inclined Mounting F-5
F.6 Force Calculation for Measurement with a Single Load Cell F-6
F.6.1 The Most Common and Simple Solution F-6
F.6.2 Force Calculation when the Web is not Centered on the Roll F-7
F.7 Mounting the Load Cells F-8
F.7.1 Preparations F-8
F.7.2 Mounting F-8
F.7.3 Cabling for Load Cell PFCL 201CE F-10
F.8 Technical Data Load Cell PFCL 201 ..... F-11
F.9 Cable Diagram, 3BSE028140D0065, Page 3/5, Rev. D F-13
F.10 Cable Diagram, 3BSE028140D0065, Page 4/5, Rev. D F-14
F.11 Dimension Drawing, 3BSE006699D0003, Rev. F F-15
F.12 Dimension Drawing, 3BSE029522D0001, Rev. B F-16
F.13 Dimension Drawing, 3BSE006699D0006, Rev. - F-17
F.14 Dimension Drawing, 3BSE006699D0005, Rev. L F-18
F.15 Dimension Drawing, 3BSE006699D0004, Rev. H F-19

Appendix G - PFTL 201 - Designing the Load Cell Installation

G.1 About This Appendix G-1
G.2 Basic Application Considerations G-1
G.3 Step-by-Step Guide for Designing the Load Cell Installation G-2
G.4 Installation Requirements G-3

CONTENTS (continued)

G.5 Mounting Alternatives, Calculating Force and Calculating Wrap Gain G-4
G.5.1 Horizontal Mounting G-4
G.5.2 Inclined Mounting G-5
G.6 Force Calculation for Measurement with a Single Load Cell G-6
G.6.1 The Most Common and Simple Solution G-6
G.6.2 Force Calculation when the Web is not Centered on the Roll G-7
G.7 Mounting the Load Cells G-8
G.7.1 Preparations G-8
G.7.2 Adapter plates G-8
G.7.3 Mounting G-8
G.7.4 Cabling G-10
G.8 Technical data load cell PFTL 201 ..... G-11
G.9 Cable Diagram, 3BSE028140D0065, Page 3/5, Rev. D G-13
G.10 Cable Diagram, 3BSE028140D0065, Page 4/5, Rev. D G-14
G.11 Dimension Drawing, 3BSE008723, Rev. D G-15
G.12 Dimension Drawing, 3BSE008904, Rev. D G-16
G.13 Dimension Drawing, 3BSE008724, Rev. G G-17
G.14 Dimension Drawing, 3BSE008905, Rev. G G-18
G.15 Dimension Drawing, 3BSE008917, Rev. H G-19
G.16 Dimension Drawing, 3BSE008918, Rev. G G-20

Appendix H - Actual Data and Settings at Commissioning

H.1 Document the Commissioning in this Form H-1

Chapter 1 Introduction

1.1 About this Manual

This User Manual describes your new Web Tension System. When you have read the manual, you will have the necessary knowledge for mechanical and electrical installation, commissioning, operation, preventive maintenance and basic fault tracing of your measurement system.

To get the best reliability and precision out of your measurement system, study this User Manual first.

1.2 Cyber security disclaimer

This product has been designed to be connected and communicate data and information via a network interface which should be connected to a secure network. It is the sole responsibility of the person or entity responsible for network administration to ensure a secure connection to the network and to take the necessary measures (such as, but not limited to, installation of firewalls, application of authentication measures, encryption of data, installation of antivirus programs, etc.) to protect the product and the network, its system and interface included, against any kind of security breaches, unauthorized access, interference, intrusion, leakage and/or theft of data or information. ABB is not liable for any such damages and/or losses.

1.3 Cyber security for PFEA

Configure firewalls according to the principle of rejecting everything that is not needed or used. For secure remote access, use a VPN connection with an encryption layer to create a secure channel over an insecure network.

SNMP

The PFEA122 complies with PROFINET Class B specification and therefore supports the Simple Network Management Protocol (SNMP). By sending SNMP requests to the PFEA122, it is possible to retrieve information about the network setup.

To prevent outsiders from obtaining information about the internal network, it is a strong recommendation to employ a firewall with the aim of blocking any unwanted traffic to SNMP ports.

Ports

The PFEA122 device uses the following UDP ports,:

- 161, 162 (SNMP)
- 34964, 49152, 53248 (PROFINET RPC Context Manager)

These ports must be open in the firewall.

1.4 China RoHS Marking

Table 1-1. 有害物质 Hazardous Substances

产品名称 Product name	**铅 Lead (Pb)**	**汞 Mercury (Hg)**	**镉 Cadmium (Cd)**	**六价铬 Hexavalent Chromium (Cr (VI))**	**多溴联苯 Polybrominated biphenyls (PBB)**	**多溴二苯醚 Polybrominated diphenyl ethers (PBDE)**
金属部件 Metal Parts	O	O	O	O	O	O
电路板组件 Printed Circuit Board Assemblies	X	O	O	O	O	O
电缆 Cables	O	O	O	O	O	O

本表格依据SJ/T 11364 标准的规定编制。

This table is prepared in accordance with the provisions of SJ/T 11364.

O: 表示该有害物质在该部件所有均质材料中的含量均在GB/T 26572 标准规定的限量要求以下。

O: Indicates that said hazardous substance contained in all of the homogeneous materials for this part is below the limit requirement of GB/T 26572.

X: 表示该有害物质至少在该部件的某一均质材料中的含量超出GB/T 26572 标准规定的限量要求。

X: Indicates that said hazardous substance contained in at least one of the homogeneous materials used for this part is above the limit requirement of GB/T 26572.

电子电器产品的环保使用期限依据SJT/ 11388 标准的规定确定。

The EPUP value of EEP is defined according to SJ/T 11388 standard.

环保使用期限仅在产品使用说明书规定的条件下才有效
The Environment Protection Use Period is valid only when the product is operated under the conditions defined in the product manual.

1.5 WEEE: Waste Electrical and Electronic Equipment

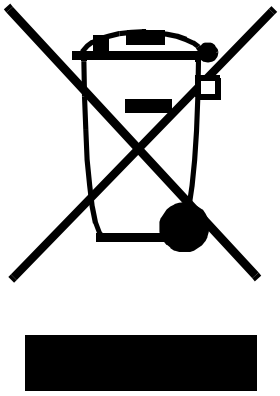

The crossed – out wheeled bin symbol on the product(s) and / or accompanying documents means that used electrical and electronic equipment (WEEE) should not be mixed with general household waste.

If you wish to discard electrical and electronic equipment (EEE), in the European Union, please contact your dealer or supplier for further information.
Outside of the European Union, contact your local authorities or dealer and ask for the correct method of disposal.

Disposing of this product correctly will help save valuable resources and prevent any potential negative effects on human health and the environment, which could otherwise arise from inappropriate waste handling.

1.6 How to Use this Manual

This user manual comprises two main parts.

1. **Information about the Tension Electronics:**
   - System and safety information (Chapter 1)
   - Installation, commissioning, maintenance, operation and fault tracing (Chapters 2-6)
   - Technical data (Appendix A)

2. **Information about Designing the Load Cell Installation:**
   - Vertical-force sensing load cell PFCL 301E (Appendix B)
   - Horizontal-force sensing load cell PFTL 301E (Appendix C)
   - Radial-force Tensiometer PFRL 101 (Appendix D)
   - Horizontal-force sensing load cell PFTL 101 (Appendix E)
   - Vertical-force sensing load cell PFCL 201 (Appendix F)
   - Horizontal-force sensing load cell PFTL 201 (Appendix G)

   Each appendix contains detailed information about one of the above load cell types when used in web tension systems with Tension Electronics PFEA111/112/122.

1.6.1 Getting Started

You can use the Fast Setup sequence to set up your system for basic measurement.
The Fast Setup guides you through a minimum number of steps to set up the tension electronics.
Perform the actions in the following sections:

- Section 3.6 Step-by-step Commissioning Guide
- Section 3.7 Performing Basic Settings
- Section 3.8 Performing a Fast Setup

For extended functionality, use “Performing a Complete Setup”.
See Section 3.11 Performing a Complete Setup.

1.6.2 Saving Actual Data and Settings at Commissioning

When commissioning is completed, you can use the form in Appendix H Actual Data and Settings at Commissioning, where actual commissioning data and settings can be filled in and saved for future use.

1.7 About this System

Your system for tension measurement consists of:

- Tension Electronics PFEA111, PFEA112 or PFEA122
  - **PFEA111** is a cost effective compact and user friendly tension electronics providing an accurate and reliable fast analog SUM signal from two load cells for control and/or monitoring. The display can show the SUM, individual A & B and difference signal. The small size and DIN-rail mount make this unit very easy to integrate into many types of electrical cabinets
  - **PFEA112** provides the same functionality and user friendliness as the PFEA111 with the addition of Fieldbus communication via PROFIBUS-DP.
  - **PFEA122** provides the same functionality and user friendliness as the PFEA111 with the addition of PROFINET communication.
- Tension Electronics PFEA113
  - **PFEA113** can supply up to four load cells and has six configurable analog outputs for control and/or monitoring of web tension. The output signals are also available on PROFIBUS-DP. Another useful feature is the possibility to, via the digital input or PROFIBUS, switch the gain for two different web paths (gain scheduling) and zero set. (The PFEA113 is described in a separate manual)

  Covering a wide range of applications the Tension Electronics comes in four versions, with different levels of performance and functionality. All four versions have multi-language digital display and configuration keys. The configuration keys being used for setting different parameters and to check the status of the tension system. The 2 x 16 character display can present sum, difference or individual load cell signals. All four versions are available in both DIN-rail version (IP 20-version, unsealed) and enclosed IP 65-version (NEMA 4) for mounting in more severe environments.
- Load cells of type PFCL 201, PFCL 301E, PFTL 101, PFTL 201, PFTL 301E and PFRL 101

The equipment is intended for use in a wide range of manufacturing processes where a web of any kind of material, for example paper, plastic or textile, is transported in a machine. The only requirement is that the web is wrapped over a roll. The force on the roll is proportional to the web tension. The resulting force is transferred through the bearing housings into the load cells. The load cells create a signal that is proportional to the force acting in the measuring direction of the load cells. This signal is processed and amplified in the tension electronics and can be used as an input signal for process control, presentation on a display or for registration.

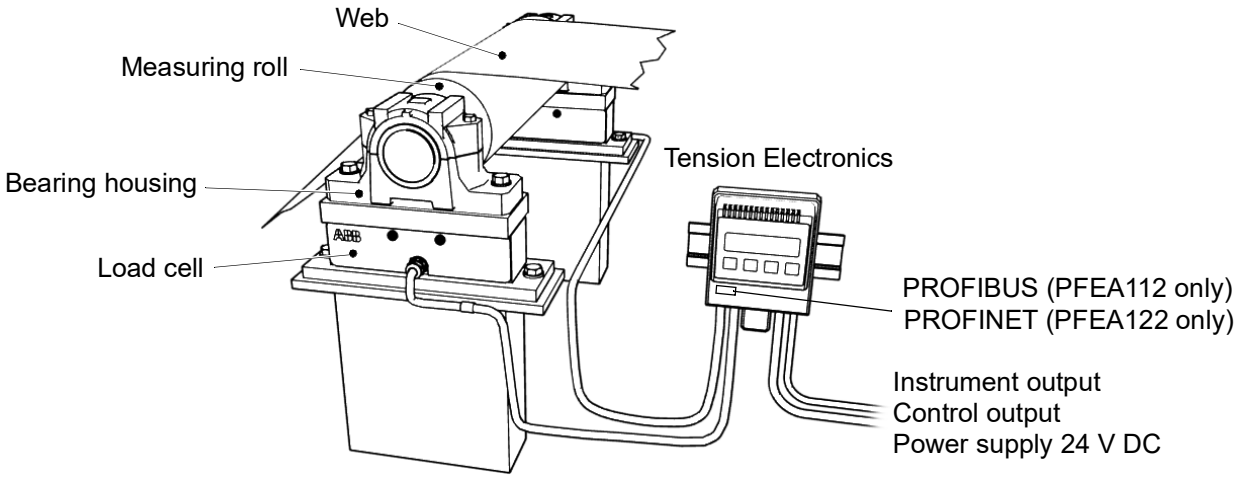

Figure 1-1. Typical Tension Measurement System with Tension Electronics PFEA111/112/122 (IP 20-version)

1.8 Safety Instructions

Read and follow the safety instructions given in this section before starting any work. However, local statutory regulations, if stricter, are to take precedence.

The tension measurement system contains no moving parts. However, the load cells are mounted close to a rotating roll over which a web is running.

1.8.1 Personnel Safety

WARNING

Never work with the load cells, or nearby, when the production line is in service. Before starting any work, switch off and lock the operating switch of the drive section for the measuring roll.

DANGER

Switch off and lock the mains operating switch to the tension electronics before performing any work on the tension electronics. When the work is completed, check that there are no loose wires, and that all units are properly secured.

NOTE

All personnel working with the installation must know the location of the main power supply switch to the measurement system and how it is operated.

1.8.2 Equipment Safety

CAUTION

Always switch off the mains supply voltage to the measurement system before replacing a unit.

CAUTION

Handle the electronic unit carefully to reduce the risk of damage from Electric Static Discharge (ESD). Note the warning label on the circuit boards.

1.9 The Measuring Technique Based on Pressductor® Technology

The operating principle of a force transducer has a great effect on how well it will perform. It also affects how stiff and vibration-free the entire load cell will be, as well its robustness and tolerance to overload. All of these factors impact on the design, operation, and maintenance of the web processing machinery.

ABB's Pressductor® transducer technology produces a signal as a result of changes in an electromagnetic field when the load cell is subjected to mechanical force. It is an operating principle that has its origin in a metallurgical phenomenon according to which mechanical forces alter the ability of some steels to convey a magnetic field. Unlike other types of load cell technologies, physical movement such as compression, bending or stretching is not required for signal generation.

A Pressductor® transducer (the sensor inside the load cell) is a simple and elegant design. Essentially, two perpendicular windings of copper wire around a steel core combine to provide a measurement signal.

An electromagnetic field is created by continuously feeding an alternating current to one of the windings. The field is positioned in such a way that, since the windings are at right angles to each other, there is no magnetic coupling between them when the load cell is unstressed.

However, when the transducer is subjected to a force, as shown in the figure, the magnetic field pattern changes. A portion of the field couples with the second winding and induces an AC voltage that reflects the tension exerted by the web on the measurement roll. This voltage - a comparatively strong transducer signal - is converted by the load cell system's tension electronics into a system output.

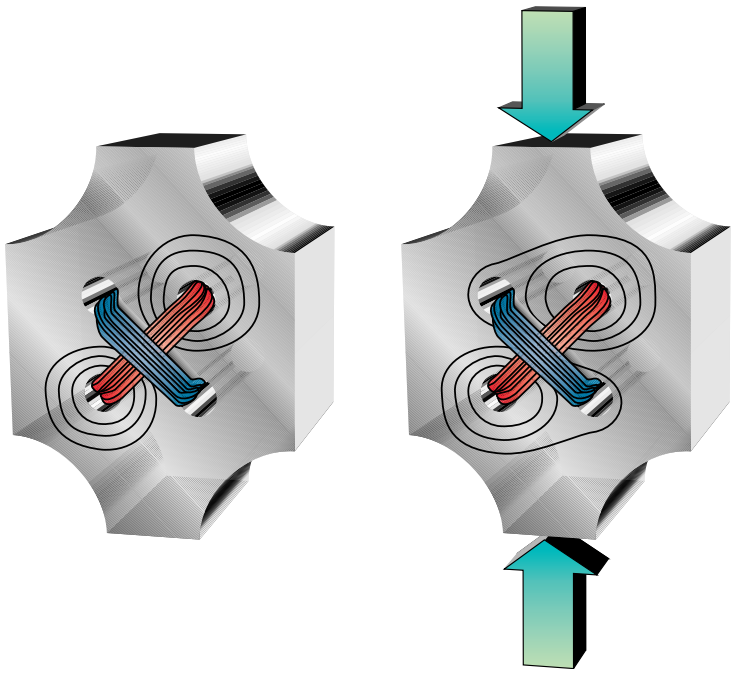

Figure 1-2. The Sensor Based on Pressductor® Technology

Chapter 2 Installation

2.1 About this Chapter

The way you install your system has more influence on its functionality, accuracy and reliability than you might think. The more accurate the installation, the better the measurement system. By following the instructions in this chapter, you will fulfill the most important requirements for proper mechanical and electrical installation.

The equipment is a precision instrument which, although intended for severe operating conditions, must be handled with care.

2.2 Safety Instructions

Read and follow the safety instructions given in Chapter 1 , before starting any installation work. However, local statutory regulations, if stricter, are to take precedence.

2.3 Mounting the Load Cells

Installation requirements and mounting instructions are given in:

- Appendix B PFCL 301E - Designing the Load Cell Installation
- Appendix C PFTL 301E - Designing the Load Cell Installation
- Appendix D PFRL 101 - Designing the Load Cell Installation
- Appendix E PFTL 101 - Designing the Load Cell Installation
- Appendix F PFCL 201 - Designing the Load Cell Installation
- Appendix G PFTL 201 - Designing the Load Cell Installation

2.4 Installing the Electronic Unit

2.4.1 Selecting and Routing the Cabling

2.4.1.1 Recommended Cabling

The cabling between the load cells and the electronic unit and electrical connections must be carefully carried out in accordance with connection diagram 3BSE028140D0065 (See the appendix for your type of load cell) or according to order-specific documentation.

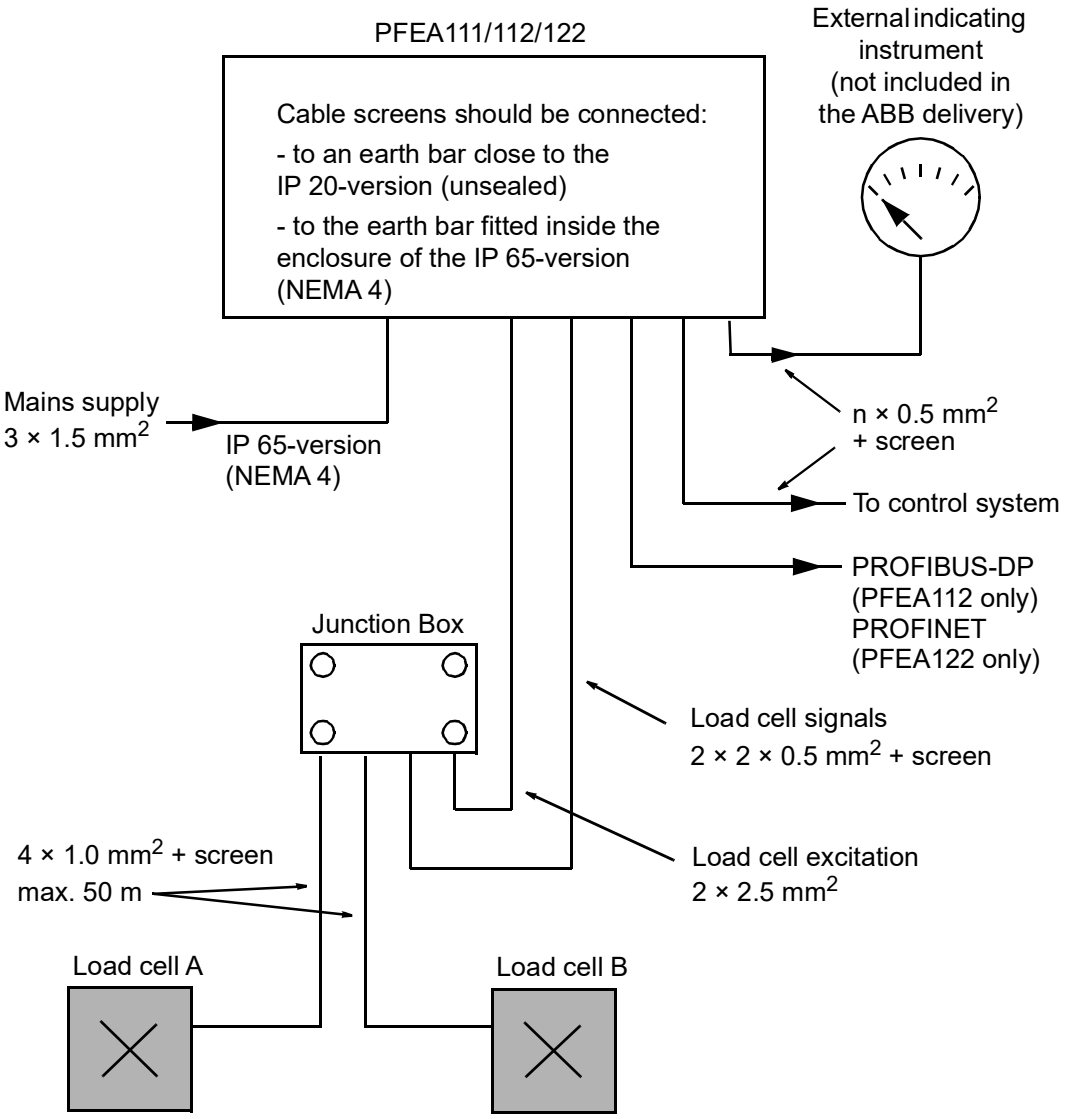

Figure 2-1. Recommended Cabling

- The maximum permitted cable resistance in the excitation circuit is shown in Table 2-1. Before commissioning, check cable resistance in the load cell excitation circuit.

Table 2-1. Maximum Permitted Cable Resistance

Load cell	Max. permitted cable resistance
PFCL 301E	5 Ω
PFTL 301E	5 Ω
PFRL 101	5 Ω
PFTL 101	5 Ω
PFCL201	5 Ω
PFTL 201	5 Ω

- Solid conductors should not be connected to terminals. Pins should not be crimped to stranded cores.
- The cable from the load cell **must be a robust four core cable**, see Figure 2-2. Diagonal pairs must be used for the signal circuits and excitation circuit.

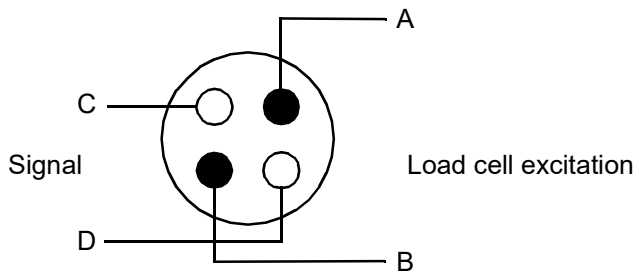

Figure 2-2. Core Arrangement in Load Cell Cable

- Between the junction box and the tension electronics, signal and excitation must be routed in separate cables. For example: a 2 × 2.5 mm^2 cable for the excitation and a shielded 2 × 2 × 0.5 mm^2 cable with twisted pair cores for the load cell signals.
- Cable for synchronization of two of more tension electronics must be screened or a twisted pair.
- The signal cable between the tension electronics and instruments, or process equipment, must be a screened 0.5 mm^2 cable.
- Cable screens must be connected to the copper earth bar. The screen connection maximum length is 50 mm.
- The protective earth conductor of the incoming mains supply must be connected to the copper earth bar in the cubicle.

2.4.1.2 Interference

For immunity to interference, the load cell cables should be separated as far as possible from noisy power supply cables. A minimum distance of 0.3 m (12 inches) is recommended. Where the measuring system cables meet noisy cables, they must cross at right angles.

2.4.1.3 Synchronization

Synchronization is not required for the wall mounted IP 65-version (NEMA 4) of the tension electronics.

If two or more IP 20-version (unsealed) tension electronics are mounted in the same cabinet, they must be synchronized.

Synchronization is done by interconnecting the "SYNC" terminals, screw terminal X1:14, of all the units and interconnecting screw terminal X:15 of all units. A twisted pair cable or a screened cable must be used.

If one unit is turned off or removed the remaining units are still synchronized.

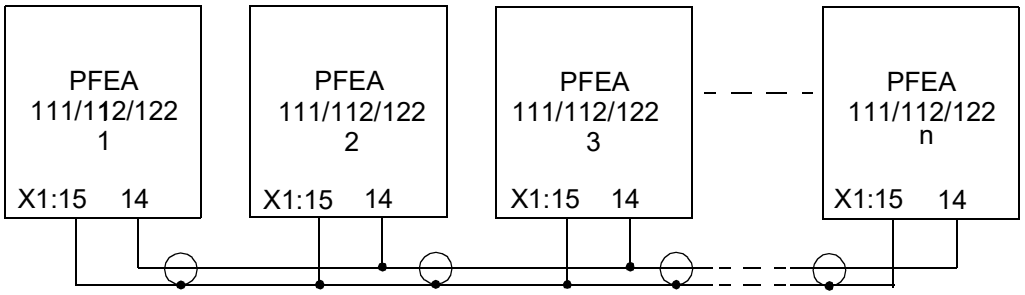

Figure 2-3. Connection for Synchronization

2.4.2 Mounting the Tension Electronics PFEA111/112/122

2.4.2.1 IP 65-version (NEMA 4)

The electronic unit is delivered in an enclosure intended for wall mounting.

When choosing a place for installation, check that there will be space to open the enclosure lid fully. Also check that there is enough working space in front of the enclosure.

The enclosure is fitted with cable glands (PFEA111 five and PFEA112 six cable glands).

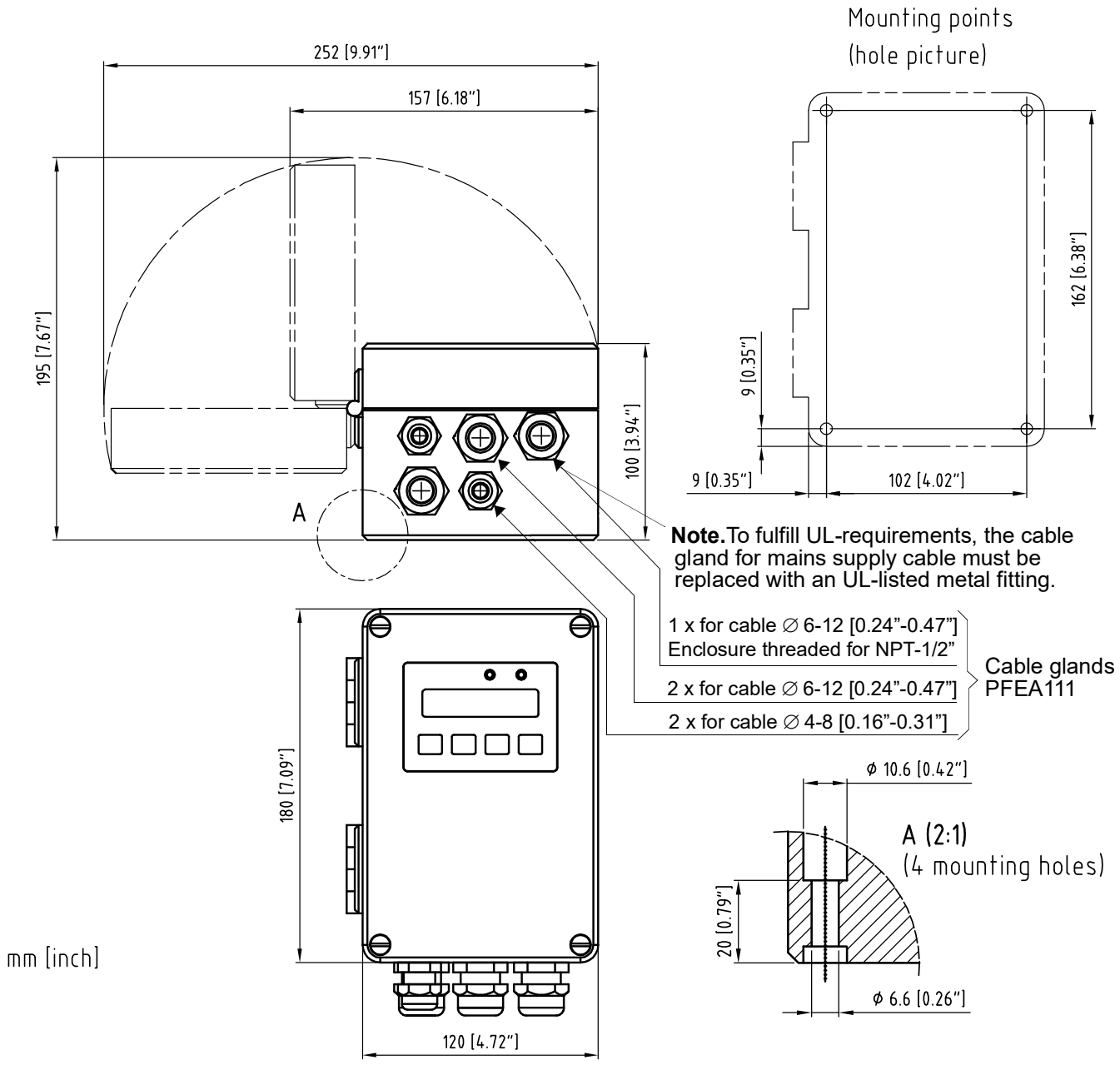

Figure 2-4. Installation Dimensions for PFEA111/112/122

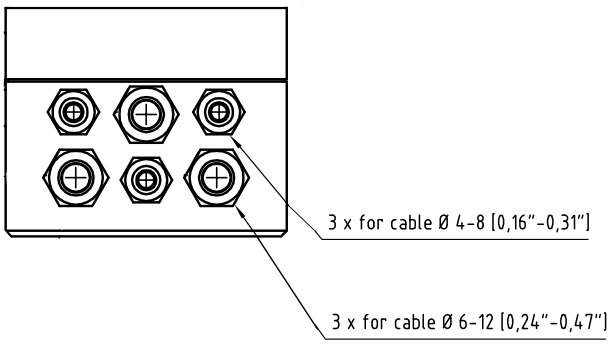

Figure 2-5. Cable Glands PFEA112

Connect the cables to terminals according cable diagrams in Appendix (B, C, D, E, F or G) depending on installed load cell type.

NOTE

Do not connect solid conductors to terminals. Do not crimp pins to stranded cores.

NOTE

The incoming mains voltage must be provided with fuses and a way of disconnection outside the tension electronics. Fuse maximum 10A, characteristics C.

2.4.2.2 IP 20-version (Unsealed)

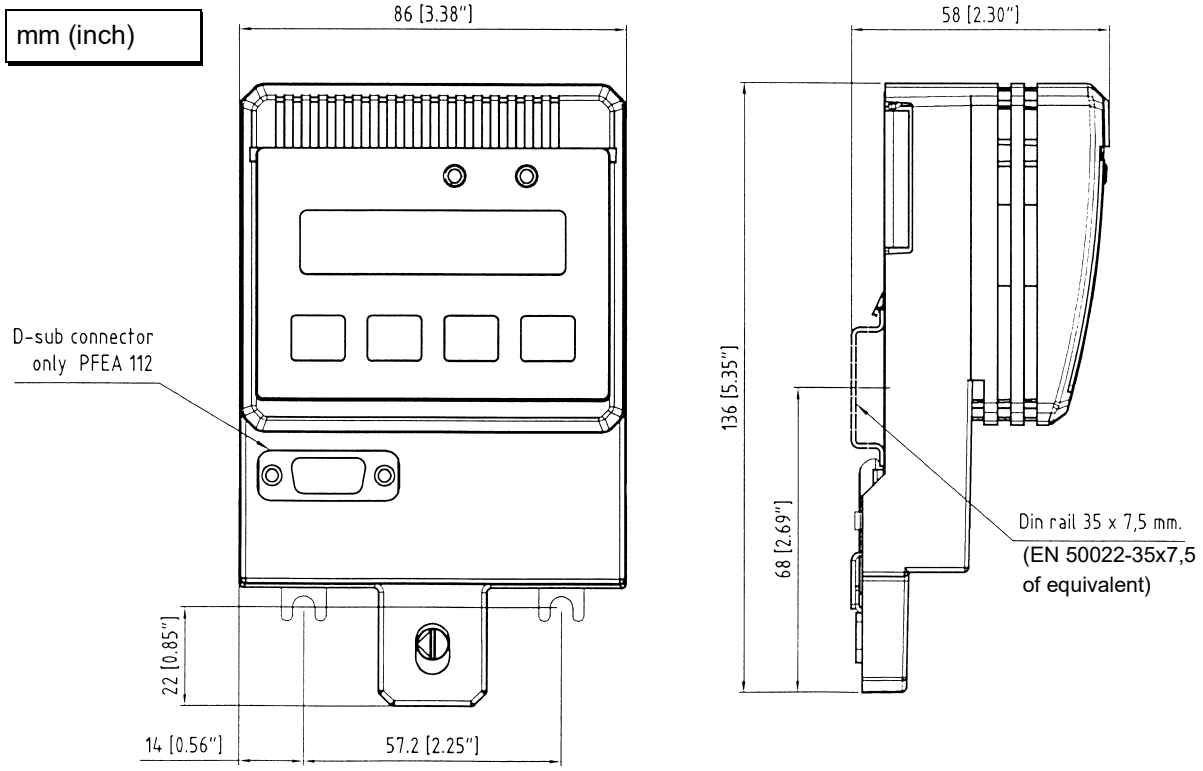

Figure 2-6. Installation Dimensions PFEA112

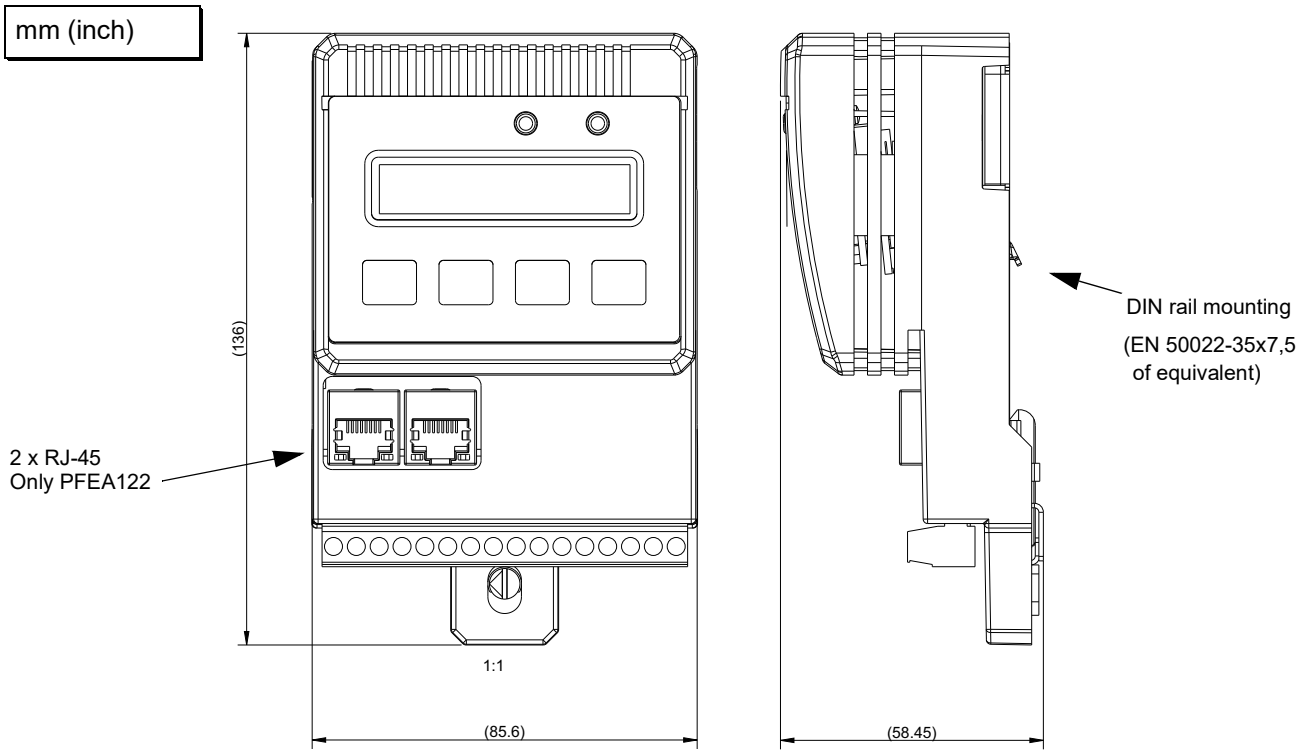

Figure 2-7. Installation Dimensions PFEA122

Connect the cables to terminals according cable diagrams in Appendix (B, C, D, E, F or G) depending on installed load cell type.

NOTE

Do not connect solid conductors to terminals. Do not crimp pins to stranded cores.

Earthing

The metal bottom of PFEA111-20, PFEA112-20 and PFEA122-20 connects to the metallic DIN-rail which serves as the Tension Electronics earth connector.
This is to ensure a good earth connection both for internal logic and for the EMI immunity and RF emission of the electronics.
The DIN-rail must have a good connection to the PE (Protective Earth) of the cabinet.

To achieve the best possible corrosion resistance, DIN-rails should be chromium plated, for instance, yellow chromium treated. Use star washers with each screw used to fasten the DIN-rail to the mounting plate.
To fasten the DIN-rail onto the mounting plate, the minimum screw diameter is 5 mm and the maximum distance between screws is 100 mm.

2.4.3 Earthing

For trouble free operation, the earthing must be properly done. Note the following:

- If the free (unscreened) length exceeds 0.1 m (4 in.) the individual pairs of power and signal conductors must be twisted separately
- The external protective earth (PE) cable must be attached to one of the earthbar screw clamps.
- All the cable screens have to be connected to the earth bar and the length of the screen connection must be less than 50 mm (2 in.).

NOTE

The cable screens must be earthed at one end only.

- Since the signal earth of the measurement system is connected to the chassis earth of the tension electronics, the input of a superior system connected to the control system must not be earthed. The best ways of interconnecting the measurement system and a superior system to achieve optimal function are shown in Figure 2-8 and Figure 2-9.

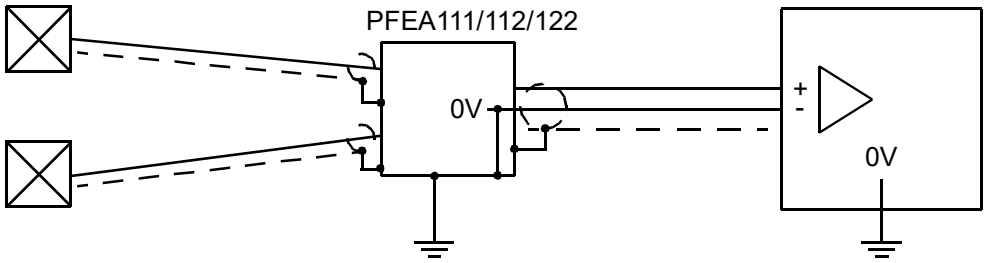

Figure 2-8. Connection to a superior system with an insulated or differential input

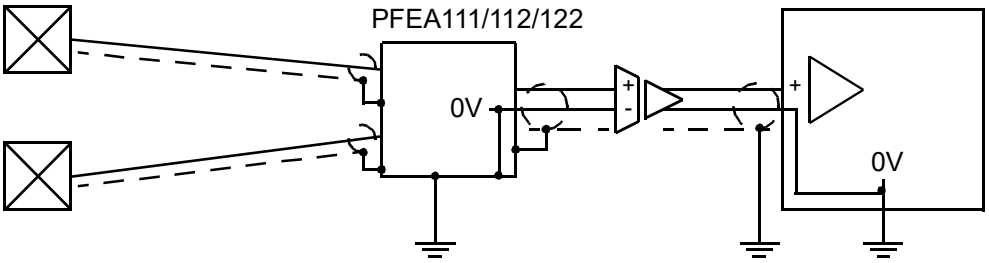

Figure 2-9. Connection to a superior system through a separate insulation amplifier

2.5 Installing MNS Select Floor Cabinet

2.5.1 Mounting Cabinets Together

If cabinets are to be mounted to each other use the included screw/bolt kit. The four M8 screws, with washers and nuts, in the angle hinges and six M6 screws at about Z1=500, Z2=1000, Z3=1500 mm height from the floor, see Figure 2-10. Tighten the M8 screws to 20 Nm maximum and the M6 screws to 10 Nm maximum.

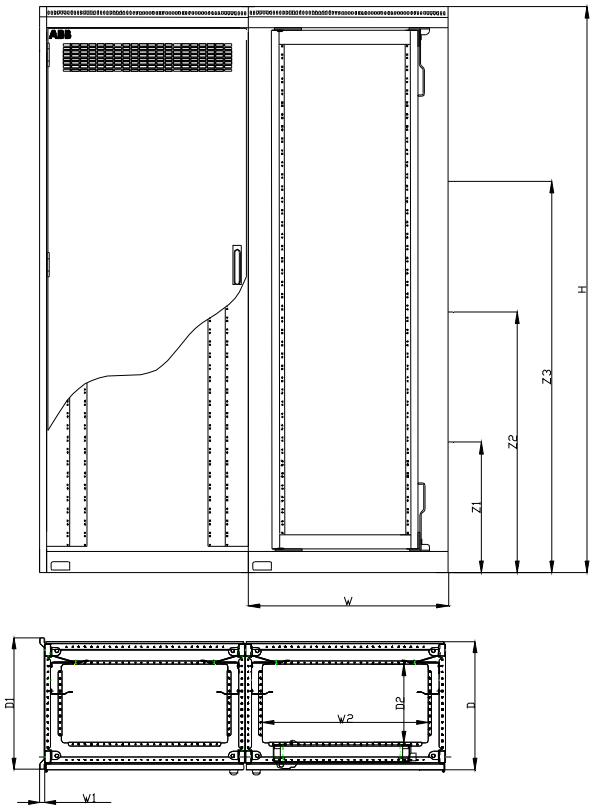

Figure 2-10. Mounting Cabinets together - Screw Position

2.5.2 Mounting Cabinets to the Floor

When fixing the cabinet to the floor use four or six M12 screws where Figure 2-11 indicates, one at each corner in the first left cabinet in a row of cabinets and screw the following cabinets with two screws each at the right side. The bottom angle hinges features holes, 14 mm (0.6”) in diameter. These holes permit you to adjust the cabinet location after holes are drilled in the floor. If drilling is necessary, make sure that no dust or other foreign matter enters the equipment in the cabinet. Please notice the minimum distances from cabinet to walls and ceiling. Use washers between the floor and the cabinet bottom to level the cabinet floor into a horizontal position.

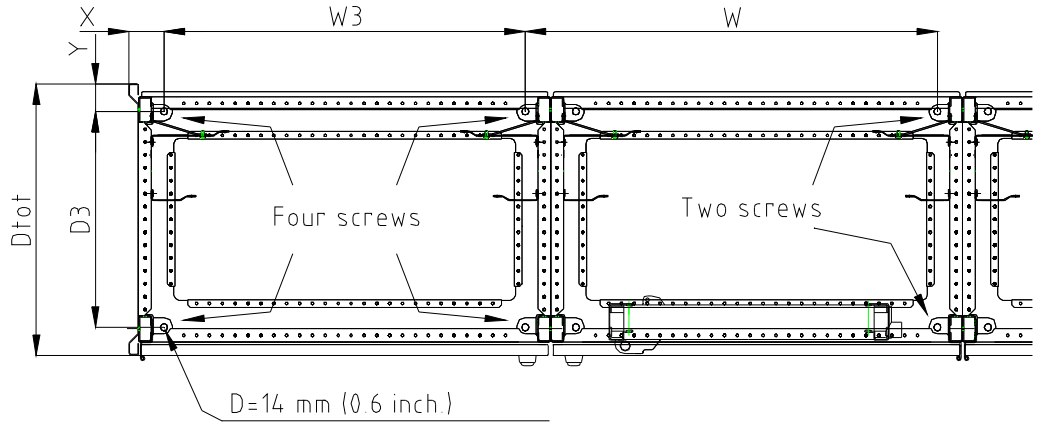

Figure 2-11. Position of the Holes for fixing the Cabinet(s) to the Floor

Table 2-2. Distances in Figure 2-11

Symbol	Distance
X	69 mm (2.7”)
W3	602 mm (23.7)
W	700 mm (27.6”)
Y	56 mm (2.2”)
D3	544 mm (21.4”)
Dtot	655 mm (25.8”)

2.5.3 Space Requirements

The overall dimensions of the cabinet are shown in a dimension diagram in Appendix A.6 Drawings.

The following rules apply to locating and positioning of the cabinet:

- The distance between the top surface of the cabinet and the roof, soffit of a beam or ventilation duct etc. must be at least 250 mm. If cables enter from above, this distance is increased to 1000 mm.
- There must be a clearance of at least 40 mm between the rear of the cabinet and the wall, and between the sides of the cabinet and the wall.
- To permit a frame with hinge, or a door to an outer encapsulation to open fully without catching on the adjacent wall, the distance to the wall must be increased to 500 mm on the hinge side (left) of the frame, or 300 mm on the hinge side (right) of the door.
- There must be at least 1 meter of free space in front of the cabinet. It must be possible to open the door completely, in order not to restrict access for check-out and servicing.

2.6 Installing Junction Box PFXC 141

PFXC 141 are normally used for connection of Pressductor® load cells where the distance between load cells and tension electronics is long. The cables fixed to the load cells and the cable to the control unit are to be connected to the junction box.

The junction box PFXC 141 shall be mounted adjacent to the load cells and located in a protected position easily accessible for service.

The dimensions of the junction box are shown in Figure 2-12.

Holes not used must be plugged.

For circuit diagram see Appendix A.5.3 Junction Box PFXC 141.

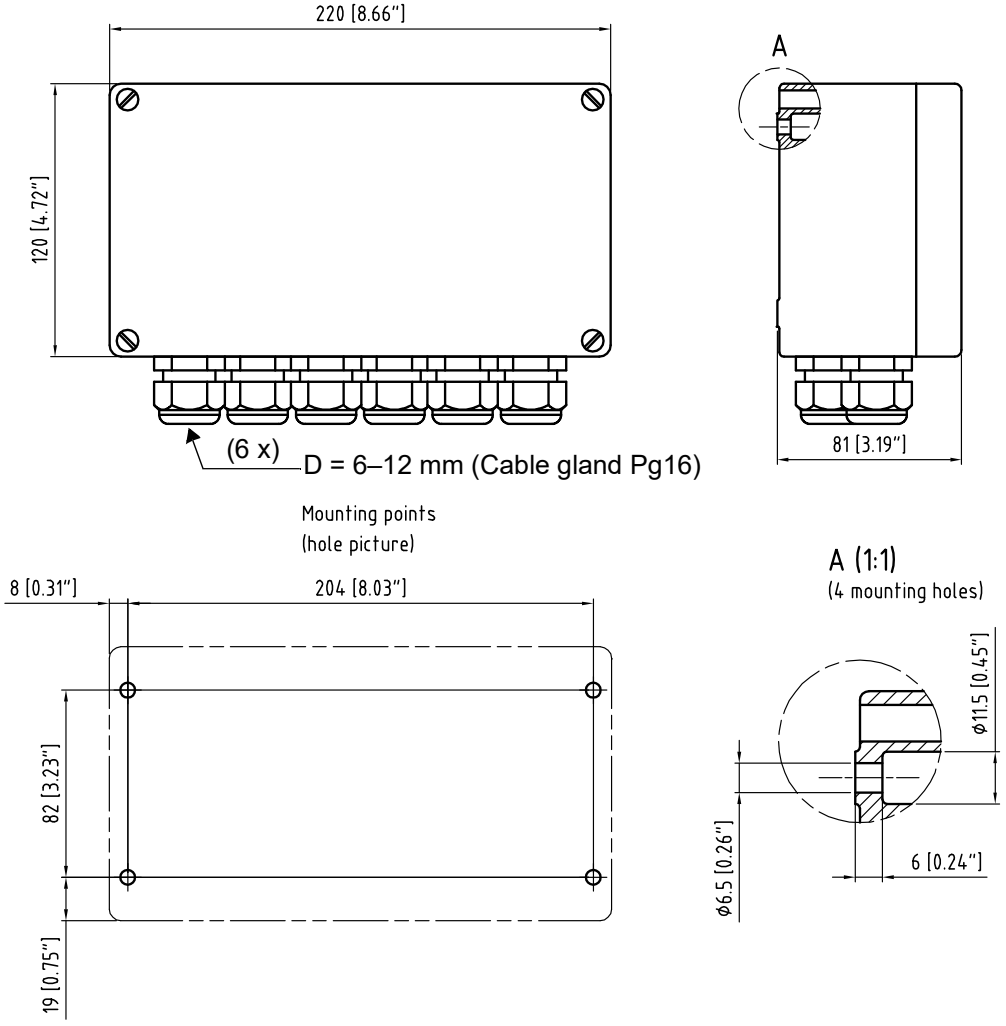

Figure 2-12. Dimensions of Junction Box PFXC 141

2.7 Connecting the Load Cells

Information for connecting the load cells is given in the appendix for each load cell type, see table below.

Type of load cell	Cable diagrams in Appendix
PFCL 301E	B
PFTL 301E	C
PFRL 101	D
PFTL 101	E
PFCL 201	F
PFTL 201	G

2.8 Connecting Optional Units

2.8.1 Insulation Amplifier PXUB 201 (only for the IP 20-version)

Insulation amplifier PXUB 201 is used when galvanic insulation between input and output, or between power supply and input/output, is required. See Section A.5.1 Insulation Amplifier PXUB 201.

Insulation amplifier PXUB 201 is intended to be installed on a DIN-rail. The PXUB 201 is connected by screw terminals.

PXUB 201 is normally supplied from the same +24 V DC supply that supplies the tension electronics.

If PXUB 201 is mounted close to the terminal group, it is not necessary for the cable between the tension electronics and PXUB 201 to be screened.

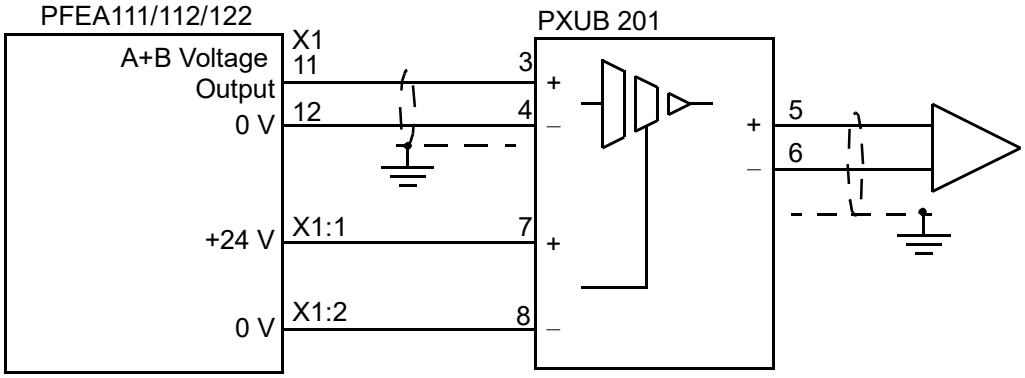

Figure 2-13. Typical Connection of Insulation Amplifier PXUB 201

2.8.2 Power Supply Unit SD83x

If no 24 V is available, the power supply units SD831, SD832 and SD833 can be used as power supply for the IP 20-versions.

The power supply unit is intended to be installed on a DIN-rail.

The main supply voltage for all the three power supply units are:

- 115 V AC (90 - 132 V), 100 V -10% to 120 V + 10%
- 230 V AC (180 - 264 V), 200 V -10% to 240 V + 10%

Table 2-3. Number of PFEA111/112/122 that can be supplied

Power Supply Unit	PFEA111	PFEA112	PFEA122
SD831 (3 A)	6	6	6
SD832 (5 A)	12	12	12
SD833 (10 A)	24	24	24

Chapter 3 Commissioning

3.1 About this Chapter

This chapter contains necessary information for commissioning your Web Tension System.

It is assumed that the Web Tension System has been installed according to the instructions given in Chapter 2 Installation and Appendix (B, C, D, E, F or G), depending on installed load cell type.

You must know the following data before starting commissioning:

1. Load cell type and nominal load, see Appendix for installed load cell type
2. Object type, see Section 3.12.2
   - Standard roll (two load cells)
   - Single side measurement (one load cell)
3. Maximum web tension
4. Desired output data at given web tension
5. Communication data, see Section 3.13

3.2 Safety Instructions

Read and follow the safety instructions stated in Chapter 1 Introduction, before starting any commissioning work. However, local statutory regulations, if stricter, are to take precedence.

3.3 Necessary Equipment and Documentation

The following items are required:

- Cable diagram
- Service tools

3.4 Using the Panel Buttons

3.4.1 Navigating and Confirming

Display	Button	How to use it
		Steps back to previous menu. Sometimes you must press this button two or more times to get back to the desired menu.
		Steps up in a list.
		Steps down in a list. Steps to next main menu.
		OK (acknowledgment) button. Confirms a selection or a parameter setting.

3.4.2 Changing Numerical Values and Parameters

SetTensionAt10V **XXXXXX N**	**NominalLoad** **ZZ kN ZZ lbs**

- X indicates a numerical value.
- Z indicates that a parameter can be chosen from a list.

SetTensionAt10V **[XXXXXX] N**	**NominalLoad** **[ZZ kN ZZ lbs]**

To change a numerical value, **X**, or parameter, **Z**, press . The numerical value or parameter is then placed within brackets [XXXXXX] or [ZZ] to show that it can be changed.

If it is a **"Z"** parameter, use and to go up or down in the list. When the desired value is shown on the display press . When is pressed the new parameter value is saved and the brackets around the value disappear.

If you have pressed so that the parameter is placed within brackets, you can cancel the entering mode by pressing . The selections you have done with and will not be stored. If is pressed the old value is displayed without brackets.

To change a numerical value, press so that the value is placed within brackets. Then the first digit can be changed with and . When the first digit has the desired value press , then the second digit can be changed with and . When pressing after the last digit has been set, the new value is saved and displayed without brackets.

Using when entering a numerical value means returning to the previous digit. By pressing a sufficient number of times you will leave the entering mode and the old value will be displayed without brackets.

3.5 Menu Overview

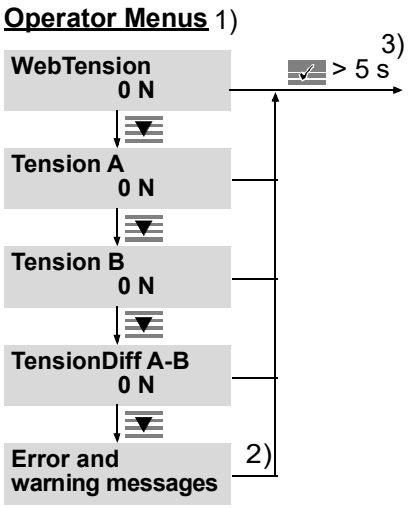

1) Operator menus are described in Section 4.7.
2) Error and warning messages are described in Section 6.6.
3) Press ☑ for 5 seconds to go to the first of the Configuration and Service menus.
4) This menu appears if unit is set to N/m, kN/m, kg/m or pli.
5) **Note!** Some sub menus asking confirmation questions are not shown in this overview. In these menus you have to confirm that your settings should be performed.

Configuration and Service Menus

FastSetUp
See 3.8
The fast setup can be made in two ways depending on how the wrap gain is set.

PresentationMenu
See 3.12.1
Language, Unit, Web width[4] and desired number of decimals are set in the presentation menu.

SetObject
See 3.12.2
Select standard roll (2 load cells), single side A or single side B measurement.

NominalLoad
ZZ kN ZZ lbs
Check the nominal load on the load cell name plate. Select nominal load from the list with ▲ or ▼. Confirm with ☑.

ZeroSet
See 3.12.4 5)
Zero set is used to compensate for load cell zero signal and tare weight.

SetWrapGain
See 3.12.5
Wrap gain can be determined by using hanging weights or by calculating.

VoltageOutput
See 3.12.6
Set voltage output, filter and tension settings.

CurrentOutput
See 3.12.7
Set current output, filter and tension settings.

MiscellaneousMenu
See 3.13.5.1 (PFEA111/112)
See 3.14.4 (PFEA122)
This menu is used to set PROFIBUS/PROFINET parameters or to set factory default.

ServiceMenu
See 3.12.9
View maximum load and current offset settings for load cell A and B. Reset maximum load memory and offset. Simulation of load cell signals.

3.6 Step-by-step Commissioning Guide

Step	Measurement	See section
1	Check that the main supply voltage is switched off.	
2	Check all cabling according to the cable diagrams.	Appendix B, C, D, E, F or G
3	Check the supply voltage DIN-rail mounted IP20-unit (unsealed) Nominal 24 V DC, Working range 18 - 36 V DC, **X1:1-2** Wall mounted IP65-unit (NEMA 4) 85 - 264 V AC (100 V - 15% to 240 V + 10%), 45-63 Hz, **X9:1-2** Nominal 24 V DC, Working range 18 - 36 V DC, **X1:1-2**	3.7
4	Perform basic settings (if necessary)	3.7
5	Perform setup: Fast setup Complete setup	 3.8 3.11
6	Check load cell signal polarity	3.9
7	Check load cell function	3.10

3.7 Performing Basic Settings

When the tension electronics has been powered on for the first time after delivery, you are asked to ***SetLanguage*** and then to ***SetUnit***. These two settings must be performed to be able to proceed with the rest of the setup. Language and unit can be changed later on if desired.

1	**SetLanguage [English]**	Select desired language from the list with ▲ and ▼. ***English*** is set as default. Confirm with ✓.
2	**SetUnit [N]**	Select desired presentation unit from the list with ▲ and ▼. ***N (Newton)*** is set as default. Confirm with ✓.
3	**SetWebWidth [XXXXXX]**	The menu SetWebWidth will only be available when the selected unit is N/m, kN/m, kg/m or pli. Default Web Width is 2m (78,740 inch).
4	**SetDecimals [X]**	Select number of decimals from the list with ▲ and ▼. Confirm with ✓.
5	**FastSetUp**	Press ✓ to start the fast setup sequence. See Section 3.8. If you want to make a complete setup, go to the separate setup menus by pressing ▼. See Section 3.11.

3.8 Performing a Fast Setup

The fast setup guides you through a minimum number of steps to set up the tension electronics. You are asked to answer some questions and to enter desired values. These selections and parameter settings must be made to get the tension electronics ready for measurement.

Only a limited number of selections and parameter settings are set in the fast setup. All other parameters are set as factory default values. See Appendix A.4 Factory Default Settings.

The fast setup can be made in two ways, depending on how the wrap gain is set.

The wrap gain can be set by selecting “HangWeight” or “EnterWrapGain”.

- Using Hanging Weights, see Section 3.8.1.
- Using Wrap Gain, see Section 3.8.2.

Hanging Weights and Wrap Gain are explained in Section 3.12.5.

3.8.1 Performing Fast Setup using Hanging Weights

The simplest method to set the wrap gain in this tension system is to use a known weight that loads the center of the roll with a rope that follows the web path exactly.

All rolls must be free turning idlers. To keep friction losses low, only use the closest rolls to define web path.

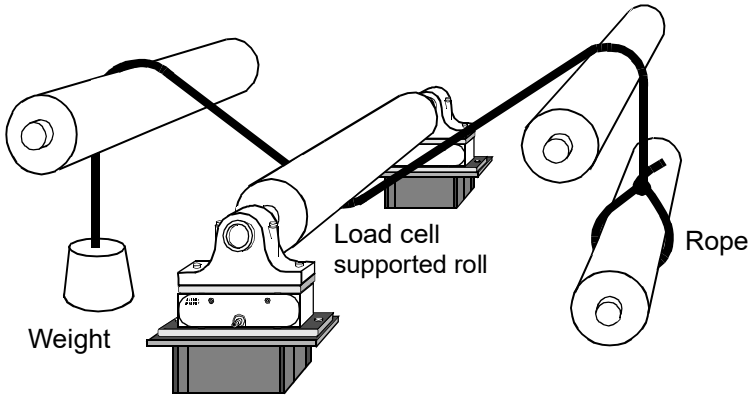

Figure 3-1. Setting Wrap Gain with Hanging Weights (example of installation)

Follow the steps below to run a fast setup using hanging weights.

1	**WebTension** > 5 seconds	Press ✓ for 5 seconds to go to the ***FastSetUp*** menu.
2	**FastSetUp**	Press ✓ to start the fast setup sequence.
3	**SetWebWidth [XXXXXX]**	The menu SetWebWidth will only be available when the selected unit is N/m, kN/m, kg/m or pli. Default Web Width is 2m (78,740 inch).
4	**SetWrapGain [HangingWeights]**	Select ***HangingWeights*** from the list with ▲ and ▼. Confirm with ✓.
5	**CellsOnRoll [2]**	Select the number of load cells that support the roll (2 or Single Side A or Single Side B) from the list with ▲ or ▼. Confirm with ✓.
6	**NominalLoad [1 kN 225 lbs]**	Check the nominal load on the load cell name plate. Select nominal load from the list with ▲ or ▼. Confirm with ✓.
7	**ZeroSet [Yes]**	Zero set is used to compensate for load cell zero signal and tare weight. Zero set must be done with no tension applied to the roll.
8	**WithNoTension PressOkToZeroSet**	**1.** Check that no load is applied on the roll. **2.** Press ✓ to zero set. "***ActionDone***" is shown on the display for one second to confirm the zero setting action.

1. Apply a known weight on the roll (see Figure 3-1).

2. Enter the value of the known weight. Confirm with ✓.

Select ***Yes*** and press ✓ to set up the voltage output.

Enter the tension value corresponding to 10 V.
Confirm with ✓.

Select filter settings (15, 30, 75, 250, 750 or 1500 ms) from the list with ▲ or ▼. Confirm with ✓.

Select ***Yes*** and press ✓ to set up the current output.
Confirm with ✓.

Enter the tension value corresponding to 20 mA.
Confirm with ✓.

Select filter settings (15, 30, 75, 250, 750 or 1500 ms) from the list with ▲ or ▼. Confirm with ✓.

Press ✓ to finish the fast setup and go to the operator menu.

In the Hang Weight menu the units N/m, kN/m, kg/m, and pli may not be used. If one of these units have been selected in the presentation menu the unit in the HangWeight menu will be shown and entered according to Table 3-1.

Table 3-1. Units used in the Hang Weight menu.

Selected unit in the presentation menu	Shown and entered unit in the Hang Weight menu
N/m	N
kN/m	kN
kg/m	kg
pli	lbs

3.8.2 Performing Fast Setup using Wrap Gain

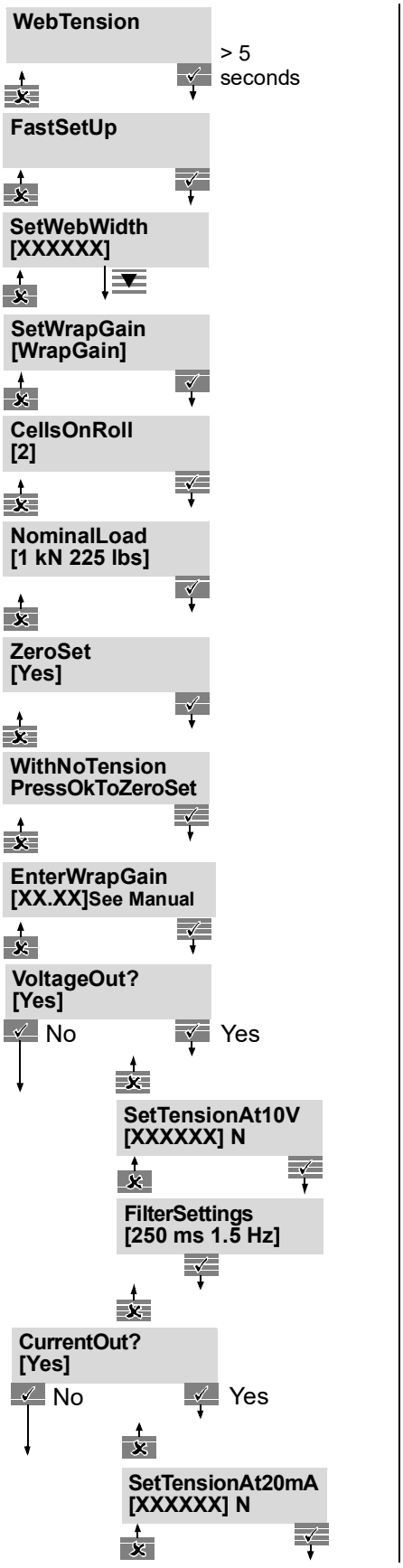

1 Press ✓ for 5 seconds to go to the fast setup menu.

2 Press ✓ to start the fast setup sequence.

3 The menu SetWebWidth will only be available when the selected unit is N/m, kN/m, kg/m or pli.
Default Web Width is 2m (78,740 inch).

4 Select ***WrapGain*** from the list with ▲ or ▼.
Confirm with ✓.

5 Select the number of load cells that support the roll (2 or Single Side A or Single Side B) from the list with ▲ or ▼.
Confirm with ✓.

6 Check the nominal load on the load cell name plate.
Select nominal load from the list with ▲ or ▼.
Confirm with ✓.

7 Zero set is used to compensate for load cell zero signal and tare weight.
Zero set must be done with no tension applied to the roll.

8 **1.** Check that no load is applied on the roll.
2. Press ✓ to zero set. "***ActionDone***" is shown on the display for one second to confirm the zero setting action.

9 Enter the calculated wrap gain. For calculating wrap gain, see Appendix (B, C, D, E, F or G) for installed load cell type.
Confirm with ✓.

10 Select ***Yes*** and press ✓ to set up the voltage output.

11 Enter the tension value corresponding to 10 V.
Confirm with ✓.

12 Select filter settings (15, 30, 75, 250, 750 or 1500 ms) from the list with ▲ or ▼. Confirm with ✓.

13 Select ***Yes*** and press ✓ to set up the current output.

14 Enter the tension value corresponding to 20 mA.
Confirm with ✓.

15	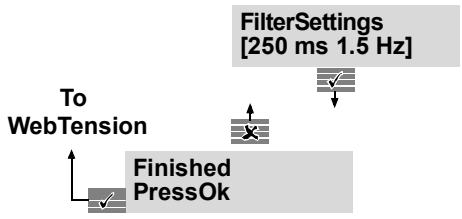	Select filter settings (15, 30, 75, 250, 750 or 1500 ms) from the list with ▲ or ▼. Confirm with ✓.
16		Press ✓ to finish the fast setup and go to the operator menu.

3.9 Checking Load Cell Signal Polarity

This is a simple method to check that the load cells are connected to give a positive output signal change from the tension electronics for increased web tension.

1. Push with your hand to apply a force corresponding to increased web tension on one load cell at a time (as close to the load cell as possible) and check if the display reading is positive. If the display reading is negative, invert the load cell signal connection to the tension electronics.

   NOTE

   If you don't know in which direction the force is acting, connect load cell A and B with the same force direction.

   To change the polarity of load cell A, invert X1:5 and 6 (In A+ and In A-).
   To change the polarity of load cell B, invert X1:9 and 10 (In B+ and In B-).

2. After changing load cell polarity, check that the display reading is positive for increased web tension.

3.10 Checking Load Cell Function

The "Hanging Weight" procedure can also be used as a function test on load cells, see Section 3.8.1.
The rope should then be placed in the web path but as close as possible to one of the load cells. The output signal should be noted, and the rope moved close to the other load cell. Check that the difference in output signal is small.

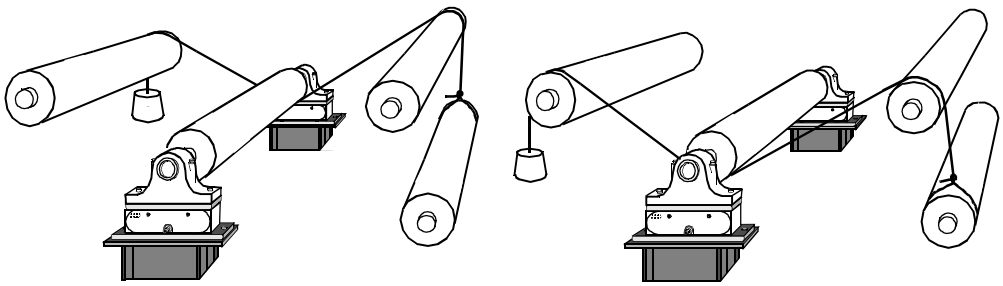

Figure 3-2. Load Cell Function Test

3.11 Performing a Complete Setup

3.11.1 Overview

The complete setup is built up by a number of main and sub menus. The table below shows the main menus in order of appearance when stepping through the complete setup. The table also gives an overview of the selections and parameter settings you can do below in each main menu.

The complete setup sequence is described in Section 3.12.

Main menus	Selections and parameter settings	See details in section...
PresentationMenu	Set language Set unit/web width Set Decimals	3.12.1
SetObject	Set object type - Standard roll (load cells A and B) or - Single side measurement (load cell A or B)	3.12.2
NominalLoad **1000 N 225 lbs**	Set nominal load	3.12.3
ZeroSet	Zero set load cells	3.12.4
SetWrapGain	Set hanging weights (actual force) or Set wrap gain (calculated value)	3.12.5
VoltageOutput	Set filter settings Set high tension value and high output voltage Set low tension value and low output voltage Set high and low output voltage limit	3.12.6
CurrentOutput	Set filter settings Set high tension value and high output current Set low tension value and low output current Set high and low output current limit	3.12.7
Miscellaneous Menu	Set PROFIBUS address and measuring range. Set PROFINET FilterTime and LoadDivision Reset all values to factory default	3.12.8 3.14.4
ServiceMenu	Read service information Reset maximum load for load cell A Reset maximum load for load cell B Activate/deactivate simulation	3.12.9

3.12 Complete Setup Sequence

This section gives a step-by-step description with detailed information of all available setup menus with related parameters, data and settings.

3.12.1 Presentation Menu

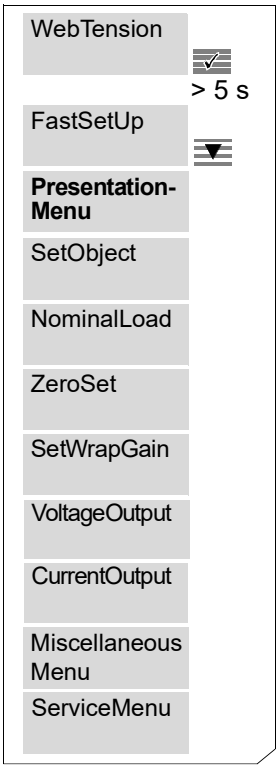

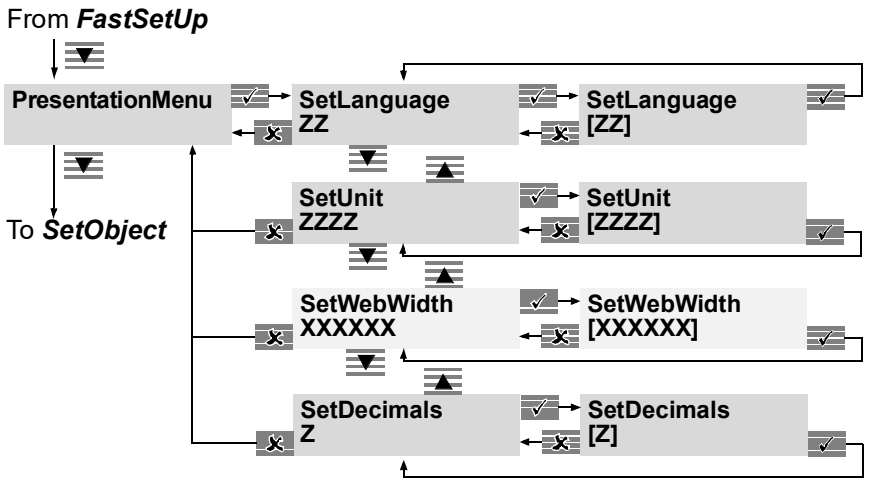

Figure 3-3. Main and Sub Menus of the Presentation Menu

Use up and down keys to select language [ZZ], unit [ZZZZ] and number of decimals [Z] from list.

The menu SetWebWidth will only be available when unit N/m, kN/m, kg/m or pli is selected.

3.12.1.1 Set Language

The following languages are available:

- English
- German
- Italian
- French
- Portuguese
- Japanese

3.12.1.2 Set Unit

The following units can be set:

- N (Newton)
- kN (kiloNewton)
- kg (kilogram)
- lbs (US pounds)

- N/m (Newton/meter)
- kN/m (kiloNewton/meter)
- kg/m (kilogram/meter)
- pli (pounds per linear inch)

If the selected unit is N/m, kN/m, kg/m or pli, the Web Width needs to be set.

Default Web Width is 2m (78,740 inch).

3.12.1.3 Set Web Width

The menu SetWebWidth will only be available when the selected unit is N/m, kN/m, kg/m or pli.

Default Web Width is 2m (78,740 inch).

The format is XX.XXX if the width is entered in meter and XXXX.XX if the width is entered in inch. Maximum Web Width is 50m (1968,5 inch)

3.12.1.4 Set Decimals

The number of displayed decimals can be set in this menu. The number of decimals may be set to a number between 0 - 5 depending on the load cell nominal load and presentation unit.

Set decimals function is further explained in Section 4.6.

3.12.2 Set Object

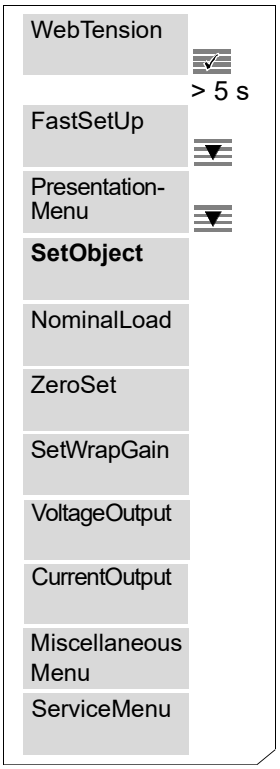

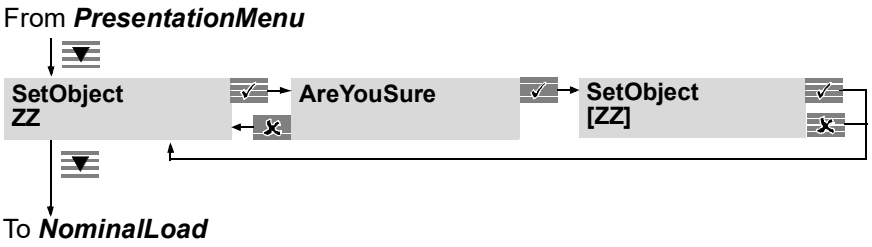

Figure 3-4. Set Object Menus

Use up and down keys to select type of object [ZZ] from list.

There are three object types that can be selected.

- Standard roll (if both load cell A and B are connected to the roll)

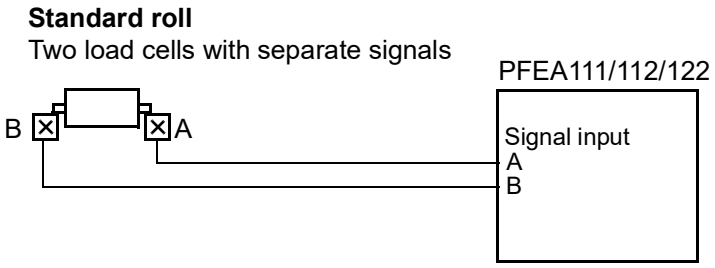

Figure 3-5. Object Type Standard Roll

- Single Side A measurement (if only load cell A is connected to the roll)

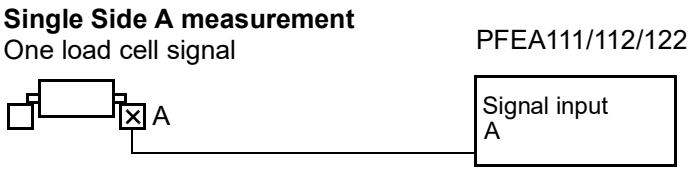

Figure 3-6. Object Type Single Side A measurement

- Single Side B measurement (if only load cell B is connected to the roll)

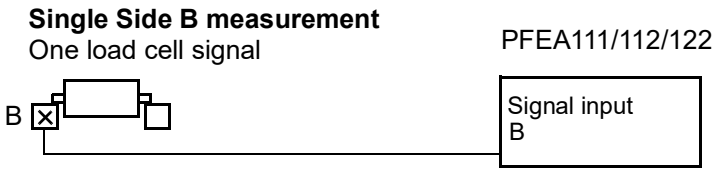

Figure 3-7. Object Type Single Side B measurement

When Single Side A or Single Side B measurement is selected the measured signal is multiplied by two and presented as web tension on display and analog output.

3.12.3 Nominal Load

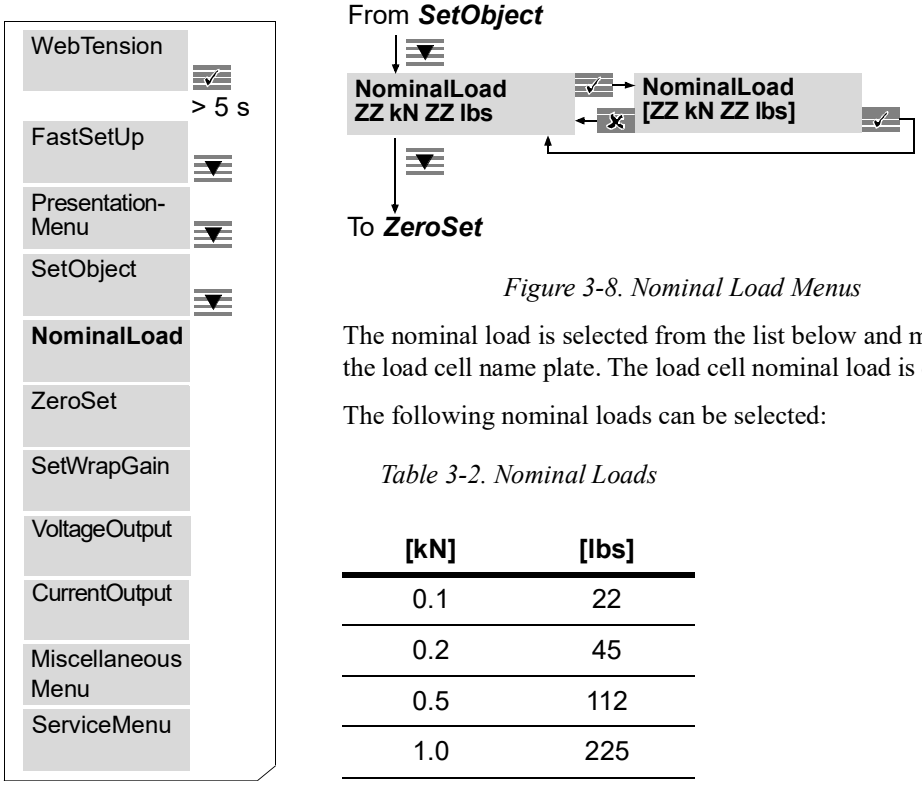

Figure 3-8. Nominal Load Menus

The nominal load is selected from the list below and must be the same as the nominal load on the load cell name plate. The load cell nominal load is displayed in kN and lbs on the same row.

The following nominal loads can be selected:

Table 3-2. Nominal Loads

[kN]	[lbs]
0.1	22
0.2	45
0.5	112
1.0	225
2.0	450
5.0	1125
10	2250
20	4500
50	11250
100	22500
200	45000

3.12.4 Zero Set

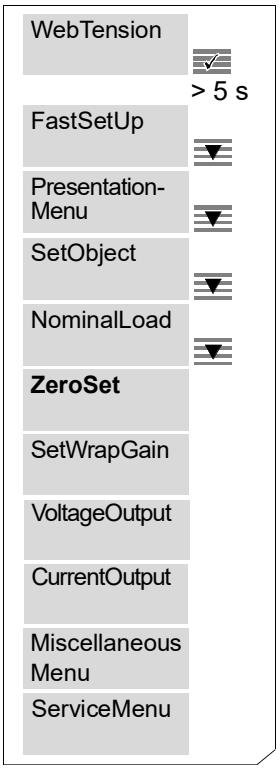

Zero set is used to compensate for load cell zero signal and tare weight.

The zero setting range is ±2 x F_{nom} (load cell nominal load).

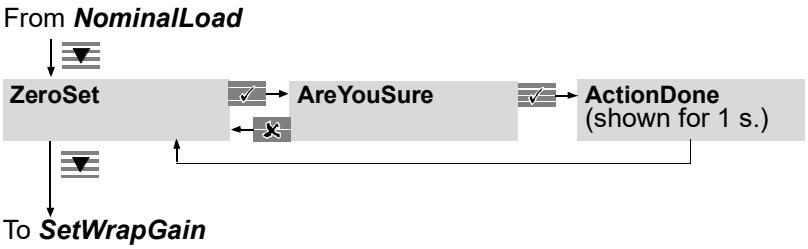

Figure 3-9. Zero Set Menus

NOTE

Zero set must be done with no tension applied to the roll.

3.12.5 Set Wrap Gain

To be able to present actual web tension on the display, the ratio between web tension and measured force on the load cell must be determined.

This ratio is a scaling factor called Wrap Gain.

The Wrap Gain depends on the web's wrap angle on the measuring roll and the orientation of the load cells. Therefore, Wrap Gain depends on the actual installation.

This gives:

T (tension) = Wrap Gain × $\mathbf{F_R}$ (force of web tension in load cell measuring direction)

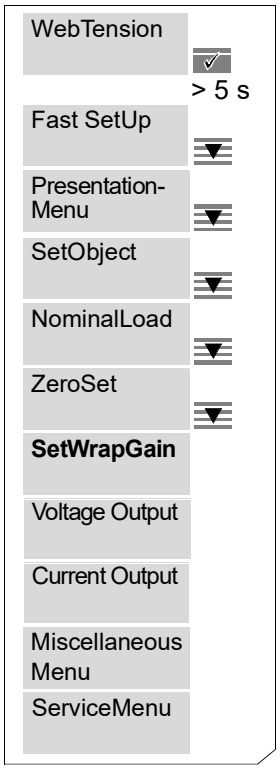

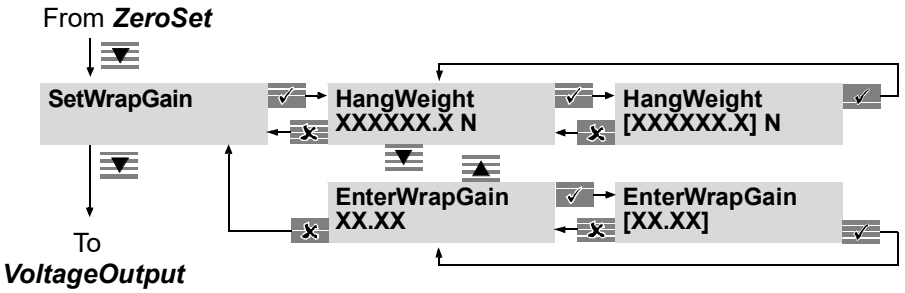

Figure 3-10. Wrap Gain Menus

There are two ways to find out the ratio between web tension and measured force on the load cells, by Hanging weights or by Calculation.

- **With hanging weights (**Menu *HangWeight***)**

  String a rope that follows the web path exactly and apply a known weight.

  The applied known weight simulates the actual web tension and the electronics measures the resulting force on the load cells caused by the applied weight.

  When both web tension (T) and the corresponding measured force (F_R) are known the tension electronics calculates the ratio T / F_R and stores the value as Wrap Gain.

  When web tension is applied to the roll the tension electronics calculates web tension by multiplying the measured force on the load cells with the Wrap Gain.

  After the hanging weight procedure, the wrap gain calculated by the tension electronics can be found in the EnterWrapGain menu.

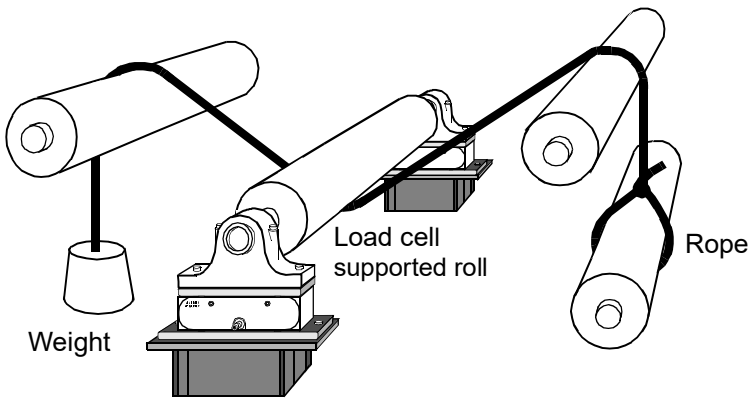

Figure 3-11. Setting Wrap Gain with Hanging Weights (example of installation)

- **By calculation (**Menu *EnterWrapGain*)

  Wrap Gain is a scaling factor which corresponds to the ratio between Web Tension (T) and the force component (F_R) from web tension that is acting in the load cell measuring direction.

  The Wrap Gain range is 0.5 - 20. If you try to set the wrap gain outside this range, the message "***WrapGainTooLow***" or "***WrapGainTooHigh***" will be shown on the display. The wrap gain can be set with a resolution of 0.01.

  Examples describing the principle of calculating Wrap Gain:

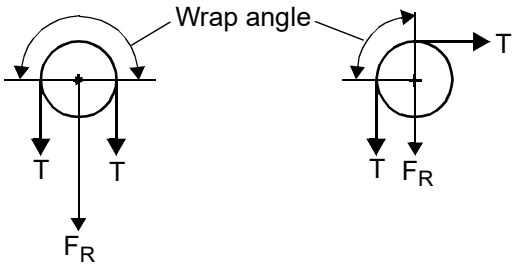

F_R = 2T

Wrap gain = $\frac{T}{F_R}$

Wrap gain = $\frac{T}{2T}$ = 0.50

Wrap gain = 0.50
(Min. value of Wrap Gain)

F_R = T

Wrap gain = $\frac{T}{F_R}$

Wrap gain = $\frac{T}{T}$ = 1.00

Wrap gain = 1.00

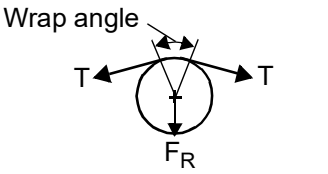

Installations where F_R is lower than T

F_R < T

Wrap gain = $\frac{T}{F_R}$

Wrap gain = > 1
(Max. permitted value of Wrap Gain is 20)

See calculation of Wrap Gain in Appendix (B, C, D, E, F or G) for installed load cell type.

3.12.6 Voltage Output

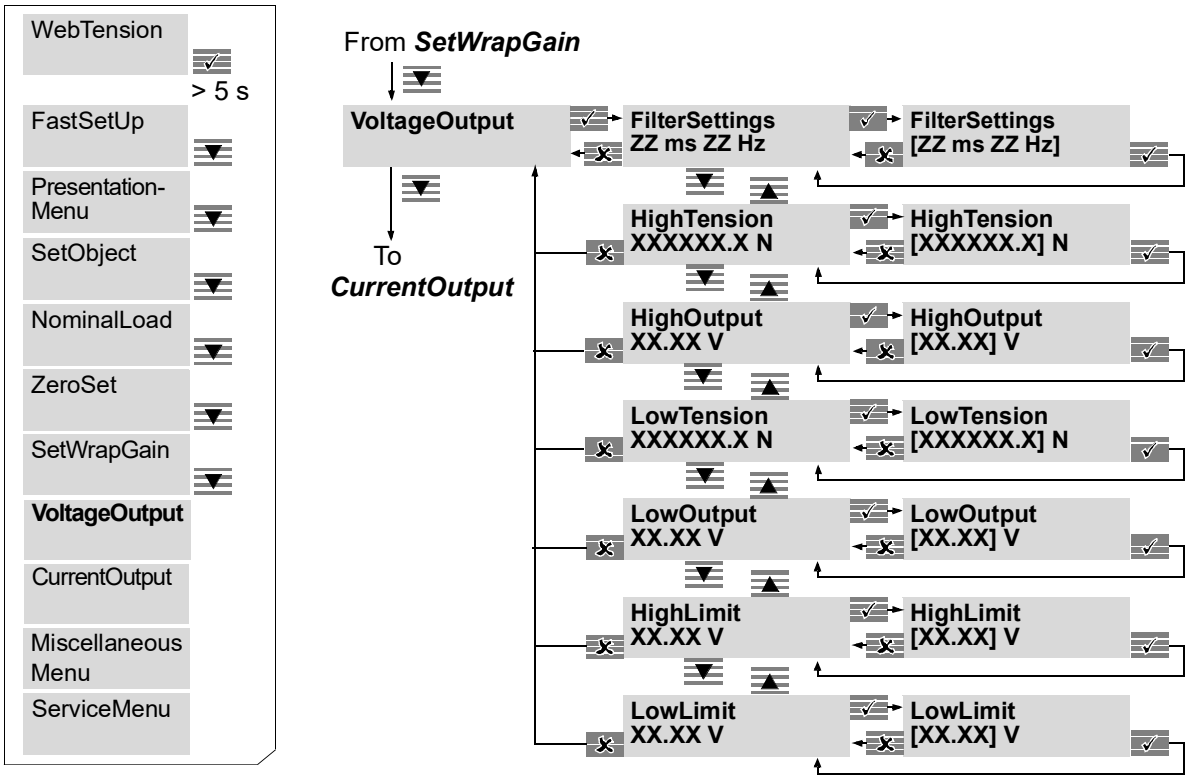

Figure 3-12. Voltage Output Menus

The following parameters can be set:

- Filter settings)

  See Table 3-3.
- High Tension (N, kN, kg, lbs, N/m, kN/m, kg/m, pli), (factory default = 2000 N)
- High Output, (factory default = +10 V)
- Low Tension (N, kN, kg, lbs, N/m, kN/m, kg/m, pli), (factory default = 0 N)
- Low Output, (factory default = 0 V)
- High Limit, (factory default = +11 V)
- Low Limit, (factory default = -5 V)

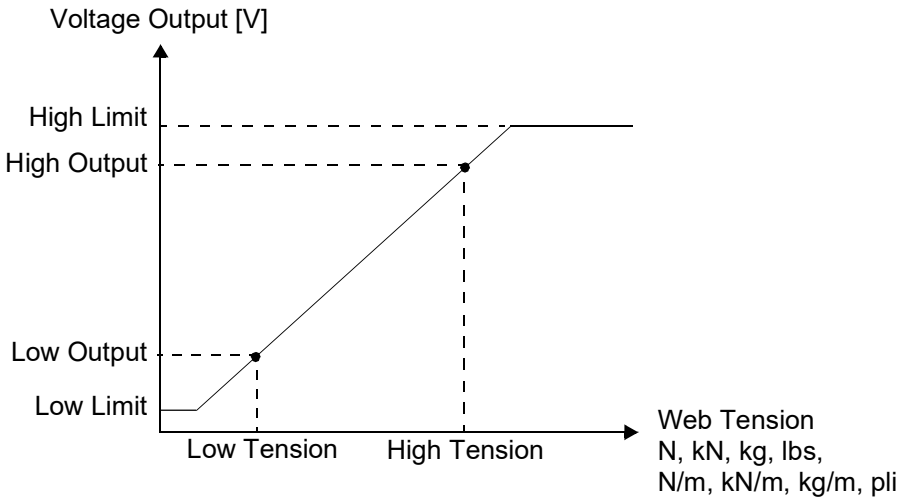

Figure 3-13. Parameter Definitions

Filtering may be used if the voltage output signal is too fast or to compensate roll imbalance.

The filters are of type linear phase, maximum flat, 20 dB/decade.

Table 3-3. Filter Settings

Step response time 0 - 90%	Cut-off frequency –3dB
15 ms	35 Hz
30 ms	15 Hz
75 ms	5 Hz
250 ms	1.5 Hz
750 ms	0.5 Hz
1500 ms	0.25 Hz

3.12.7 Current Output

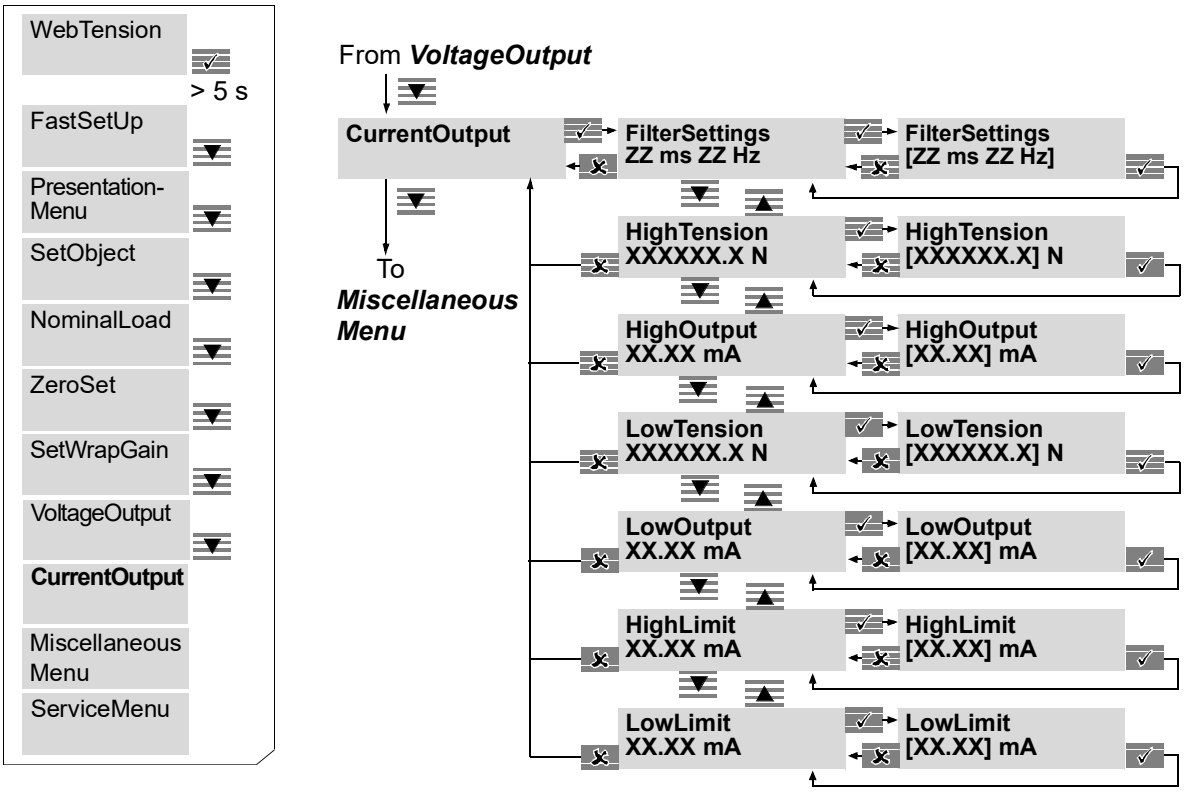

Figure 3-14. Current Output Menus

The following parameters can be set:

- Filter settings

  See Table 3-4.
- High Tension (N, kN, kg, lbs, N/m, kN/m, kg/m, pli), (factory default = 2000 N)
- High Output, (factory default = 20 mA)
- Low Tension (N, kN, kg, lbs, N/m, kN/m, kg/m, pli), (factory default = 0 N)
- Low Output, (factory default = 4 mA)
- High Limit, (factory default = 21 mA)
- Low Limit, (factory default = 0 mA)

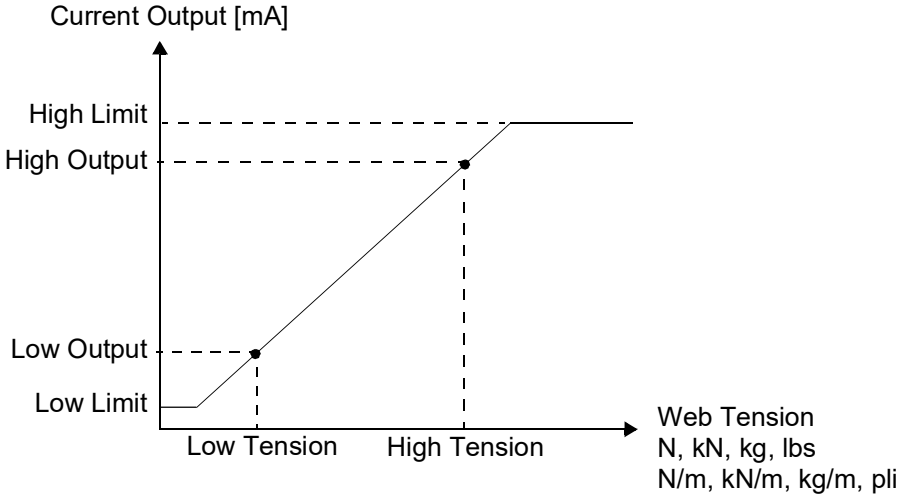

Figure 3-15. Parameter Definitions

Filtering may be used if the current output signal is too fast or to compensate roll imbalance.

The filters are of type linear phase, maximum flat, 20 dB/decade.

Table 3-4. Filter Settings

Step response time 0 - 90%	Cut-off frequency –3dB
15 ms	35 Hz
30 ms	15 Hz
75 ms	5 Hz
250 ms	1.5 Hz
750 ms	0.5 Hz
1500 ms	0.25 Hz

3.12.8 Miscellaneous Menu

For PFEA112 See Section 3.13.5.1

For PFEA122 See Section 3.14.4

3.12.9 Service Menu

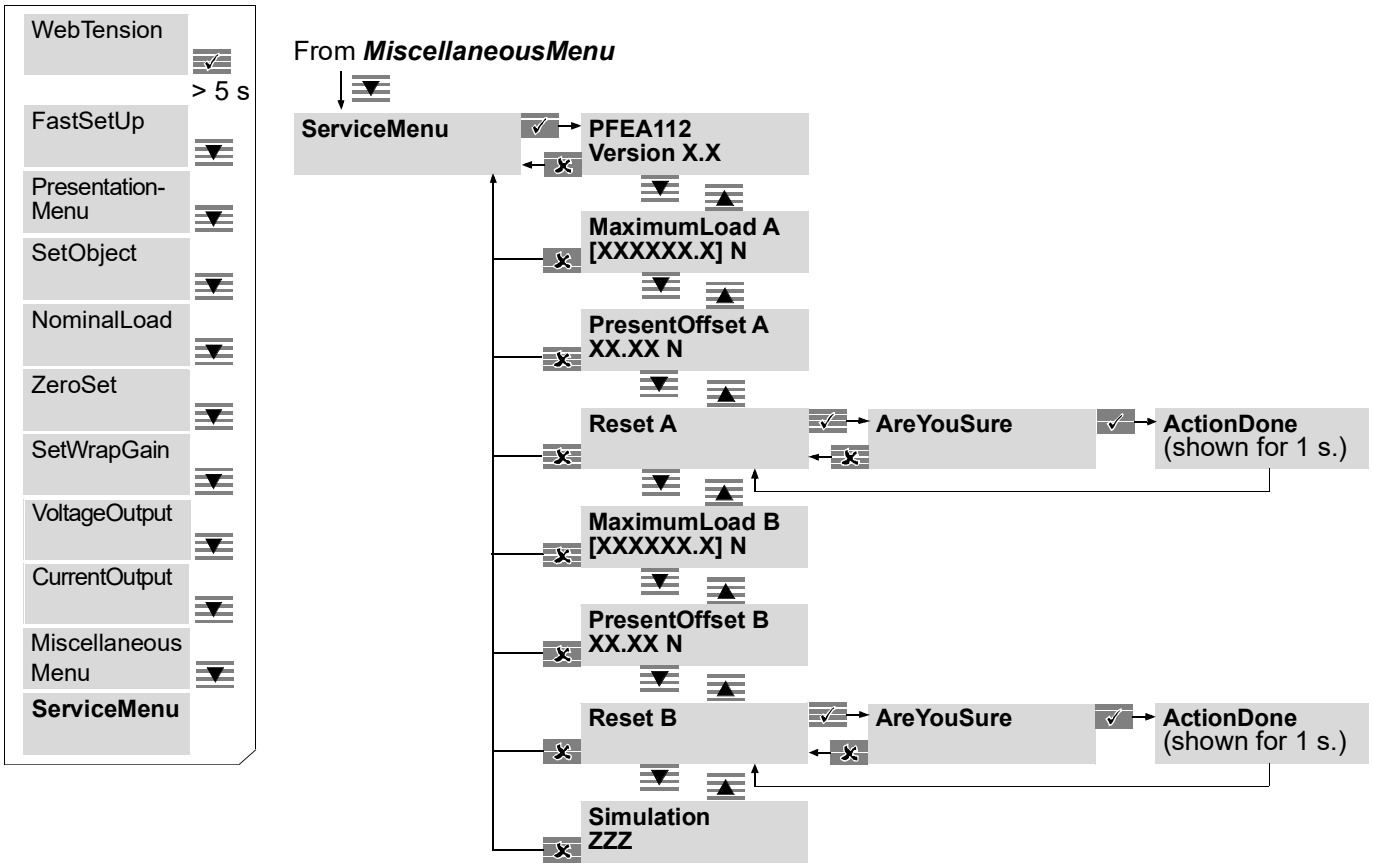

Figure 3-16. Service Menus

The service menu has parameters that can be viewed only and parameters that can be set.

- Parameters that can be viewed only:
  - Software version number
  - Maximum load A
    Displays maximum load since last reset
  - Present offset A
    Displays zero offset at last zero set
  - Maximum load B
    Displays maximum load since last reset
  - Present offset B
    Displays zero offset at last zero set
- Parameters that can be set:
  - Reset A
    This action sets “Maximum load A” to zero.
  - Reset B
    This action sets “Maximum load B” to zero.
  - Simulation
    Activate/deactivate simulation function.

3.12.9.1 Maximum Load / Present Offset

For each load cell connected to the web tension electronics PFEA111/112/122, a maximum load memory, with the range ±6.5 x F_{nom}, will store the highest load that is applied to the load cell.

The maximum load consists of:

- Load cell zero signal (with no load on the load cell)
- F_{RT}, applied force component of tare in the measuring direction of the load cell

  and
- F_R, measured force (force component of tension in the measuring direction of the load cell).

The maximum load memory can be reset if a load cell is replaced.

3.12.9.2 Reset A/B

Reset A sets “MaximumLoad A” to zero.

Reset B sets “MaximumLoad B” to zero.

3.12.9.3 Simulation function

Simulation can be set to ON or OFF.

If simulation is set to ON, the parameters PercentOfFnomA and PercentOfFnomB will be displayed. PercentOfFnomB is not shown if Single side A has been selected in ObjectType and PercentOfFnomA is not shown if Single side B has been selected in ObjectType.

The parameter PercentOfFnom can be set between –100 and +200 in steps of one. When simulation is set to ON, it replaces the measured value from the load cells. The value +100 means that the value is the same as load cell loaded to Fnom.

Zero set cannot be used when simulation is activated. When simulation is set to ON, the red status led is lit and on the display the message “Simulation” is shown. If “ok” is pressed, the message is moved to the bottom of the Operator menu in the same way as failure and warning messages.

SetFactory Default sets the simulation to OFF.

When simulation is set to ON, the default values are:

- PercentOfFnomA = 55%
- PercentOfFnomB = 45%

3.13 PROFIBUS DP Communication with PFEA112

3.13.1 General Data about PROFIBUS DP

The purpose of the PROFIBUS DP communication in PFEA112 is to provide a high speed communication link between superior systems and the PFEA112.

PROFIBUS DP is a multidrop communication protocol intended to connect PLCs to sensors (DP means “Distributed Peripherals”).

The physical interface is RS 485 (two wire cable).

The maximum transfer rate is 12 Mbit/s.

The protocol is based on a master-slave principle. The PFEA112 is a slave. A PROFIBUS master polls the slaves all the time, that means the polling is going on with a fixed time interval even when no new data is available from the PFEA112.

Each slave has an address in the range 0 to 125.

PROFIBUS requires that the message format, communication parameters and error codes of slaves are made available in a so called type file, also known as GSD file (See Appendix A.7 PROFIBUS DP - GSD File for PFEA112). This file is then stored in the PROFIBUS Master.

At start-up the PROFIBUS Master verifies that the Slave with the given type file is indeed available on the bus.

3.13.2 Master-slave Communication

The Master and the slave communicate via an output buffer and an input buffer.

The master reads the input buffer and writes to the output buffer once every scan cycle for PROFIBUS.

The slave polls the output buffer and updates values in the input buffer.

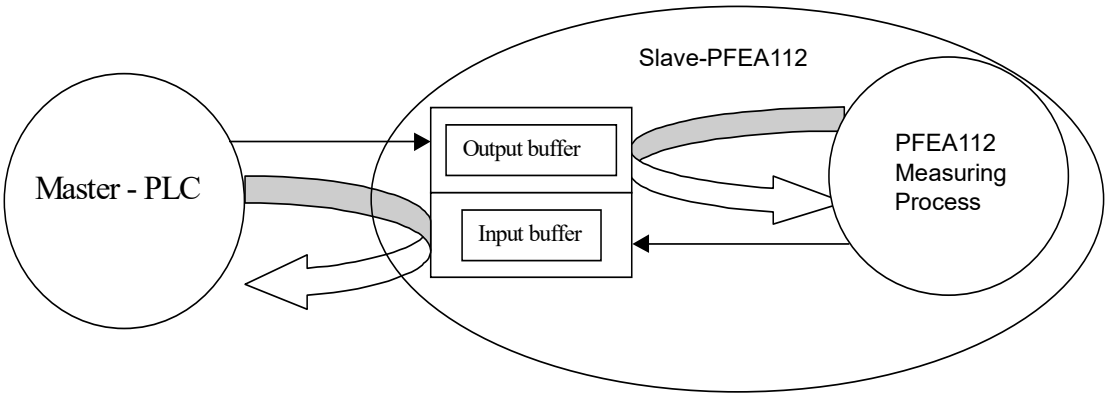

3.13.3 PROFIBUS Physical Media

The bus line is specified in EN 50170 as line type A. Line type B should be avoided.
The physical properties of the media are shown in Table 3-5 and Table 3-6.

Table 3-5. Line Parameters

Parameter	**Line type A**	**Line type B** (Avoid if possible)
Impedance in Ω	135 to 165	100 to 130
Capacitance per unit length (pF/m)	<30	<60
Loop resistance (Ω /km)	110	---
Core diameter (mm)	0.64	> 0.53
Core cross section (mm^2)	> 0.34	> 0.22

The specified line parameters result in the following lengths of a bus segment.

Table 3-6. Maximum Cable Lengths per Segment

Maximum bus segment length (m)	**Transmission rate in kbit/s**						
	9.6	**19.2**	**93.75**	**187.5**	**500**	**1500**	**12000**
Wire A	1200	1200	1200	1000	400	200	100
Wire B	1200	1200	1200	600	200	-	-

Stub lines up to 1500 kbit/s < 6.6 m.
If you are using 12 Mbits/s you should avoid stub lines.

If you are using line A as specified by EN 50 170, the bus terminating resistance combination is as shown in Figure 3-17, so that a defined idle state potential is ensured on the line.

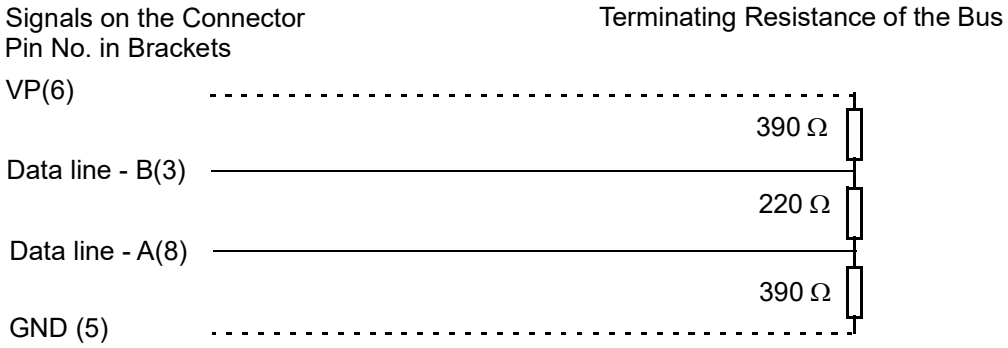

Figure 3-17. Line Termination of Wire A in Accordance with EN 50170

To bridge longer distances and bypass EMC interference, transmission with optical fiber conductors (glass or plastic) is also specified.
Standard bus plug connectors are available for transmission with optical fiber conductors. These connectors convert RS 485 signals to optical fiber conductor signals and vice versa. (OLP = optical link plug).
In addition, repeaters are available to handle this signal conversion.
This gives you the option of switching between the two transmission techniques within one system if necessary.

You can connect up to 126 stations to one PROFIBUS system.
To be able to handle this number of participants on the bus, the bus system must be divided into individual segments, containing maximum 32 stations each.
These segments are linked by repeaters.

x

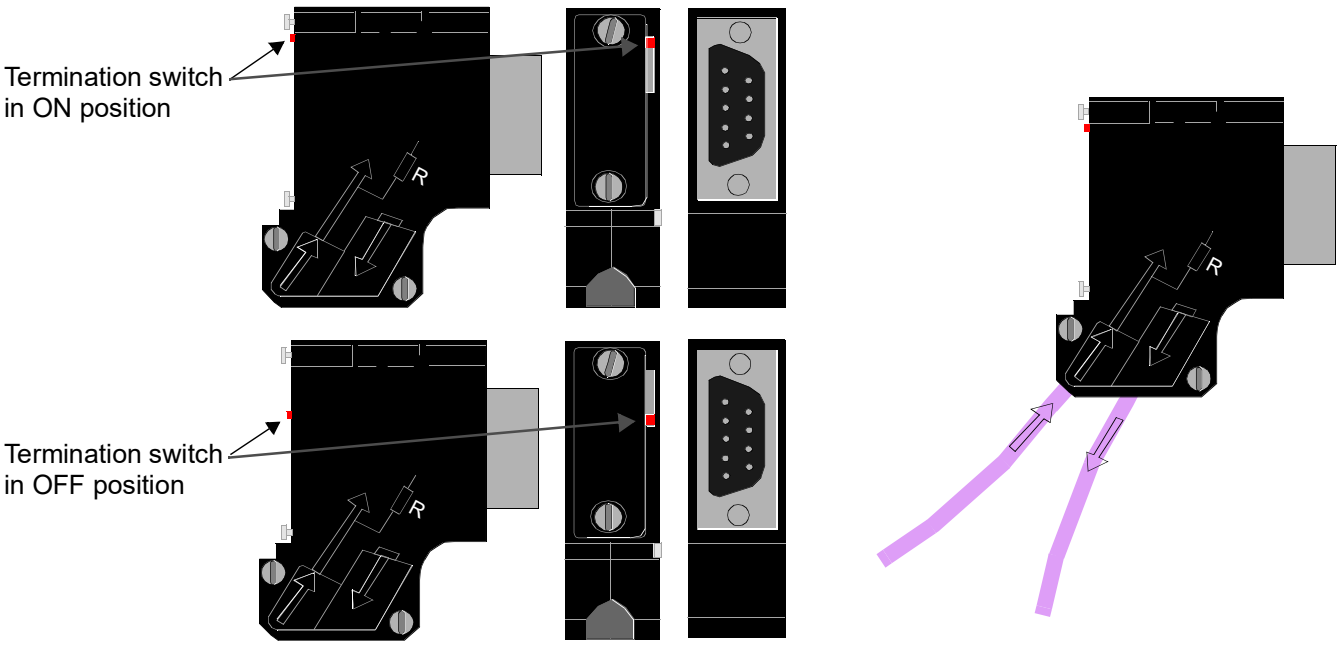

Figure 3-18. PROFIBUS Cable Connector

3.13.4 Commands through PROFIBUS

PROFIBUS DP is available in PFEA112 (not in PFEA111).

“Zero set” is the only command that can be performed through PROFIBUS in PFEA112.

3.13.5 Handling of Measurement Data through PROFIBUS

Two web tension measurement values are transferred through PROFIBUS:

- Value 1 has the same step response time as "voltage output"
- Value 2 has the same step response time as "current output".

The scaling of "voltage output" and "current output" does not affect the measurement values transferred through PROFIBUS.

If zero set has been performed, the zero set values are transferred through PROFIBUS.

For scaling of PROFIBUS measurement values, see Section 3.13.5.2.

Each measurement value has 16 bit, 2-complement representation (Integer 16).

3.13.5.1 Miscellaneous Menu PFEA112

Use this menu for scaling PROFIBUS measuring values

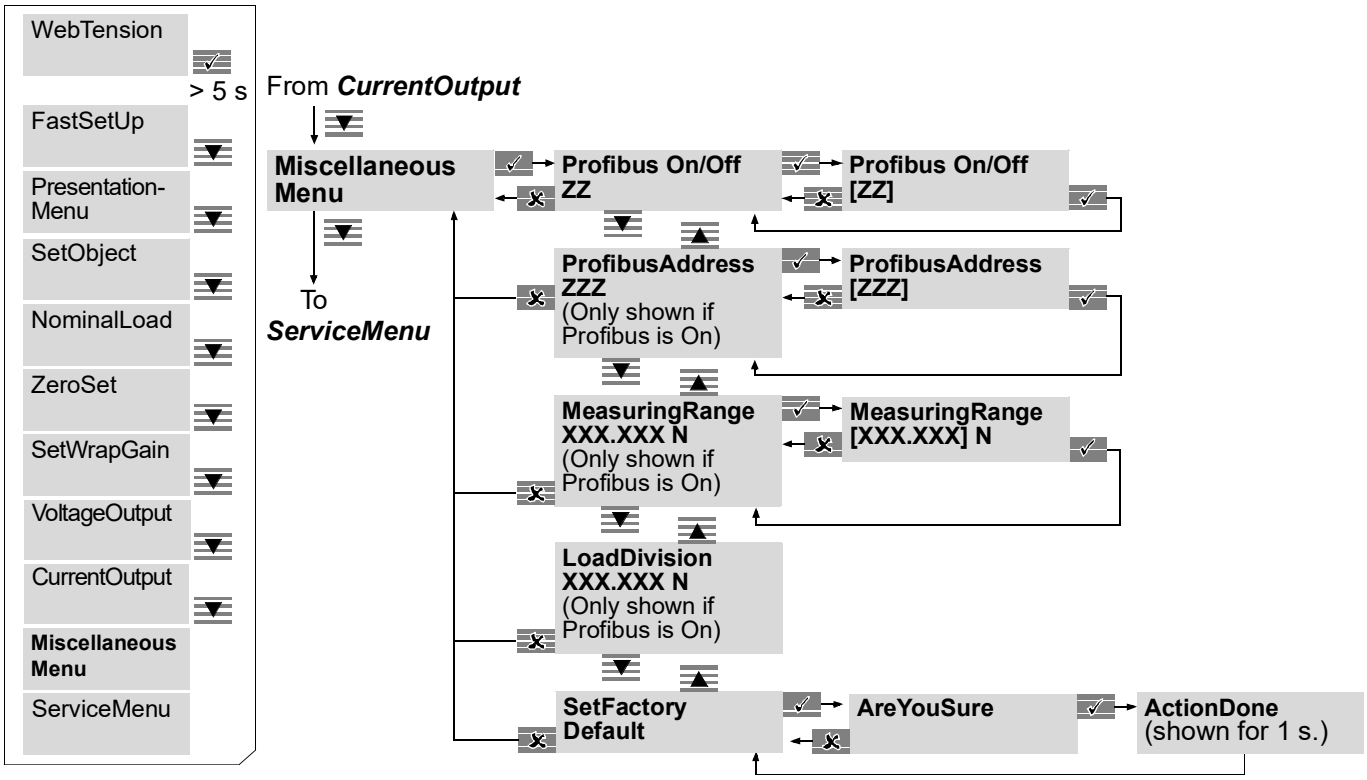

Figure 3-19. PROFIBUS Scaling

Table 3-7. PROFIBUS parameters

Parameter	Description
PROFIBUS On/Off	PROFIBUS can be enabled and disabled.
PROFIBUS Address	If the PROFIBUS is enabled, the PROFIBUS address must be set in the range 000 - 125.
Measuring Range	If the PROFIBUS is enabled, the PROFIBUS Measuring Range and load division can be set.

3.13.5.2 Scaling of PROFIBUS Measuring Values

The PROFIBUS values can be scaled in two ways:

- **Default Scaling** – the scaling is only depending on load cell nominal load.
- **User defined Scaling** – the scaling of the PROFIBUS values can be set by the user.

Default Scaling

This is exactly the same function as in previous software versions, 1.7 and earlier. Older units can thus be replaced by new units with SW1.8 and later without changing PROFIBUS master setup using default scaling. The value of the least significant bit is defined as Load Division.

The Load Division is set based on Measuring range

PROFIBUS Measuring Range	Value of least significant bit, Load Division (Resolution)
$0.001 \times 2 \times F_{nom} \times 5000$	$0.001 \times 2 \times F_{nom}$ (1)

(1) F_{nom} = load cell nominal load

Example for 1 kN load cells:

With 1 kN load cells the value of the least significant bit is: $0.001 \times 2 \times 1000 = 2$ N

Measuring range: $5000 \times 2 = 10\,000$ N

User Defined Scaling

The PROFIBUS Measuring Range and Load Division can be adjusted to user needs.

PROFIBUS Measuring Range

PROFIBUS Measuring Range (**estimated web tension during normal operation**) is a parameter entered by the user. After the user has changed the Measuring Range value, changing Load cell nominal load does not affect the PROFIBUS scaling. The value of the least significant bit is defined as Load Division.

Load Division

Load Division is the resolution that will be used on PROFIBUS. The Load Division value is calculated by PFEA112 and depends on the set measuring range.

The measuring range is divided into a limited number of divisions in the range 2001 - 5000.

The Load Division value = one division, contains only one significant digit (1, 2 or 5).

The PROFIBUS can handle max. –32768 to +32767 (2^{16}) divisions.

Example 1:

a. PROFIBUS Measuring Range (set by user) = 15 500 N
(estimated web tension during normal operation)

b. Load Division calculated by PFEA112 = 5 N
(value of least significant bit on PROFIBUS)

c. PROFIBUS Measuring Range/Load Division = 15500/5 = 3100
(the measuring range is divided into 3100 divisions)

Example 2:

If the Load Division, 5 N, in Example 1 is not sufficient, the Load Division can be adjusted. This can be done by setting (decreasing) MeasuringRange in the Miscellaneous Menu to a value that gives a sufficient Load Division (resolution).PROFIBUS

a. Measuring Range = 9000 N
(New, lower setting on measuring range)

b. New Load Division calculated by PFEA112 = 2 N
(New value of least significant bit on PROFIBUS)

With the setting 9000 N in PFEA112 , the PROFIBUS measuring range 0 – 15500 N (divided into 7750 divisions) can still be used, now with the Load Division (resolution) 2 N.

Normally, there is no need to set the measuring range lower than 1/3 of the estimated web tension during normal operation.

The max. value that can be transmitted via PROFIBUS, for a given Load Division, is:

– Max. value = Load Division x 32767

NOTE

After the user has changed the Measuring Range value, the only way to return to Default scaling, is to use the function Set Factory default in the Miscellaneous Menu.

3.13.5.3 Filtering of PROFIBUS Measuring Values

“Value 1” has the same filtering as the voltage output.

“Value 2” has the same filtering as the current output.

3.13.5.4 Input Buffer, Communication Block from PFEA112 to PLC

This section specifies measurement values and Boolean values in the input buffer communication block.

Data	Byte No.	Bit No.							
		7	6	5	4	3	2	1	0
Value 1	01	MSB							
	02	LSB							
Value 2	03	MSB							
	04	LSB							
Boolean in	05	No. 7	No. 6	No. 5	No. 4	No. 3	No. 2	No. 1	No. 0
	06	Spare for future use							

Data:
Value 1, Web tension
Step response time (filtering) equal to the setting for **voltage** output, 16-bit, 2-complement representation (Integer 16)

Value 2, Web tension
Step response time (filtering) equal to the setting for **current** output, 16-bit, 2-complement representation (Integer 16)

Boolean in:
The error or warning is active when the corresponding bit is set to “1”.

Bit No. 0: Flash memory error

Bit No. 1: EEPROM error

Bit No. 2: Supply error

Bit No. 3: Load cell excitation error

Bit No. 4: Synchronization problem

NOTE

The Web Tension data is valid only if all of the status bits 0-4 are zero. If any of these status bits is 1, the Web Tension data will continue to update but the value might not represent the actual Web Tension.

3.13.5.5 Output Buffer, Communication Block from PLC to PFEA112

This section specifies Boolean values in the output buffer communication block.

Data	Byte No.	Bit No.							
		7	6	5	4	3	2	1	0
Boolean out	01	No. 7	No. 6	No. 5	No. 4	No. 3	No. 2	No. 1	No. 0
	02	Spare for future use							

Bit No. 0: Zero set. Zero set is performed when the bit is changed from “0” to “1”.

3.14 PROFINET Communication with PFEA122

3.14.1 General Data about PROFINET

PROFINET is an open Fieldbus standard for applications in manufacturing and process automation. PROFINET technology is an international standard that is part of IEC 61158 and IEC 61784

The most common variant of PROFINET used for integration of simple distributed I/O and time critical applications into Ethernet communication is called PROFINET IO. It is fully maintained by one of the largest automation communities in the world, PROFIBUS International (PI). PROFINET IO is also one of the most widespread variants of Industrial Ethernet communication for nodes in factory automation.

PROFINET IO is based on IEEE 802.3. It supports a transmission speed of 100 Mbps with auto negotiation and auto crossover in a switched Ethernet network. PROFINET IO uses Ethernet as well as TCP, UDP, and IP as the basis for communications and it is designed to work with other IP-based protocols on the same network.

Communication in a PROFINET IO network has different levels of performance:

- The transmission of non time-critical parameters and configuration data occurs in the standard channel of PROFINET IO based on TCP/IP or UDP/IP.
- The transmission of time-critical process data within the production facility, occurs in the Real Time (RT) channel.

Devices in a PROFINET IO network can be divided into the three types: Controller, Supervisor and Device.

- A Controller (normally a PLC) acts like a Master and collects alarms, events and status from Devices. It is the Controller that exchange cyclic and acyclic data with a Device.
- A Supervisor are like a Controller but do not exchange cyclic data with a Device, instead it is more of an engineering tool used for diagnostics, trouble shooting, commissioning, network maintenance etc.
- A Device acts like a Slave and communicates only with the Controller or Supervisor. A GSDML (General Station Description Markup Language) file describes the communication properties of a Device for the Controller.

For standards and commercially available PROFINET documentation, visit the PROFINET Web Site http://www.profinet.com.

3.14.2 PROFINET properties of PFEA

PFEA is an PROFINET IO Device with the following properties:

- Realtime Class RT (RT_CLASS_1)
- Media Redundancy Protocol (client)
- Minimum cycle time for process data 1ms
- Baud rate 100Mbit/s, auto-negotiation.
- Identification & Maintenance records I&M0 (Read Only) to I&M3 (Read/Write)
- Support for Device Discovery
- Support for SNMPv1 and SNMPv2, LLDP, DCP
- Supports one IO-Controller AR and one IO-Supervisor AR

- Certified according to PNIO Version 2.42, Netload class 2, Conformance class B
- Described by a GSDML file, see Appendix A.8.

3.14.3 Plant Integration

3.14.3.1 Data to and from PFEA

Table 3-8. Cyclic data from PFEA122 to PLC

Data	Type	Description
Web Tension A+B	Int32	Unit is the same as presentation unit. StepResponse and LoadDivision for this value are described in 3.14.4.
Web Tension A	Int32	Unit is the same as presentation unit. StepResponse and LoadDivision for this value are described in 3.14.4.
Web Tension B	Int32	Unit is the same as presentation unit. StepResponse and LoadDivision for this value are described in 3.14.4.
Status	Uint8	B0: Flash memory error B1: EEPROM error B2: Supply Error B3: Excitation error B4: Synchronization problem B5: Set to 0 B6: Set to 0 B7: Set to 0

Table 3-9. Cyclic data from PLC to PFEA122

Data	Type	Description
Commands	UInt8	B0: Zero set is done when this bit is changed from 0 to 1 (rising flank). Other bits: Set to 0
Spare	UInt8	Spare, set to 0.

NOTE

The Web Tension data is valid only if all of the status bits B0-B4 are zero. If any of these status bits is 1, the Web Tension data will continue to update but the value might not represent the actual Web Tension.

If Single Side A is chosen as the object type, the Web Tension A+B value will be equal to 2 x Web Tension A and Web Tension B will be equal to zero.

If Single Side B is chosen as the object type, the Web Tension A+B value will be equal to 2 x Web Tension B and Web Tension A will be equal to zero.

3.14.3.2 Integration example

Below is an example with pseudo code showing how to calculate some tension values based on data received from PFEA via PROFINET.

This example assumes that unit is set to Newton as indicated by suffix _N in the variable names:

```
//Tension_N - Equal to value showed in the Operator
Menu/WebTension
//LoadDivision - Setting in Configuration
Menu/Miscellaneous/LoadDivision
//TensionFromProfinet - Value from PFEA via Profinet

Tension_N := LoadDivision * TensionFromProfinet;

//ForceOnLC_N – Force applied on Load Cell
//WrapGain - Setting in display menu Miscellaneous/LoadDivision

ForceOnLC_N := Tension_N * WrapGain;
```

This example assumes unit is set to US pounds as indicated by suffix _lbs in the variable names.

```
//Tension_lbs – Equal to value showed in the Operator
Menu/WebTension
//LoadDivision – Setting in Configuration
Menu/Miscellaneous/LoadDivision
//TensionFromProfinet – Value from PFEA via Profinet

Tension_lbs := LoadDivision * TensionFromProfinet;

//ForceOnLC_lbs – Force applied on Load Cell
//WrapGain - Setting in display menu Miscellaneous/LoadDivision

ForceOnLC_lbs := Tension_lbs * WrapGain;
```

Another example suggesting how to handle tension considering status byte information:

```
//PFEAStatusByteFromProfinet - Status byte from PFEA via
Profinet
//UsedTension_N - The value used control loops etc in other
places in PLC
if (PFEAStatusByteFromProfinet = 0) then

 UsedTension_N := OldValidTension_N;  //Freezing of last valid
tension

else

 UsedTension_N := Tension_N;

 OldValidTension_N := ValidTension_N;

end_if;
```

3.14.4 Miscellaneous Menu PFEA122

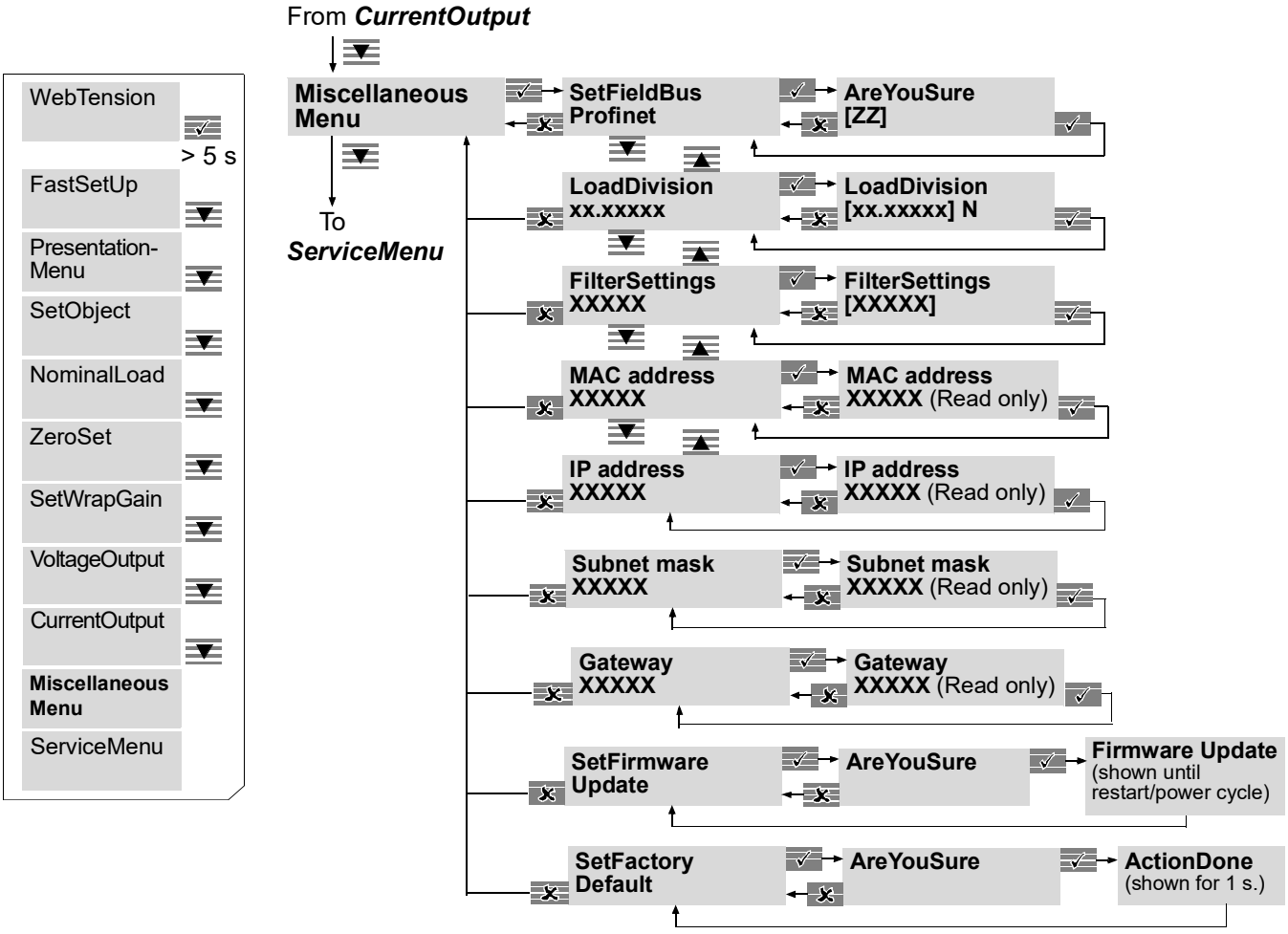

The following parameters can be set:

- Set Fieldbus. This setting determines what type of communication that is available over the Ethernet connectors. Fieldbus settings that can be chosen are: Off and PROFINET. If Fieldbus is set to Off, all Ethernet communication is disabled. Default Fieldbus setting is PROFINET.

CAUTION

A change of this parameter requires a restart of PFEA and will cause a temporary pause in measurements.

- LoadDivision. Load division is the value of the least significant bit (in the cyclic data sent to the PROFINET Controller) and default is 0.001N. Range for Load Division is: 0.0001 to 100 N. Load division is shown in selected presentation unit.
- FilterSettings: This filter setting is only applied to the value sent over the Fieldbus. Filter setting that can be chosen: 15 ms 35 Hz, 30 ms 15 Hz, 75 ms 5 Hz, 250 ms 1.5 Hz, 750 ms 0.5 Hz, 1500 ms 0.25 Hz.
- SetFirmware update. Puts the device in firmware update mode. Web tension measurement and Fieldbus communication is stopped during firmware update.
  For firmware update, contact ABB.
- SetFactory default. Set the same parameters as on delivery except the maximum load memories. Note!

NOTE

This differs from a FactoryReset command via PROFINET which only affects PROFINET parameters, not application settings.

The following parameters that can be seen below are read only since these are set by the PROFINET Controller.

- MAC address, IP address, Subnet mask and Gateway.

The menus Load Division + Filter Settings + MAC address + IP address + Subnet mask + Gateway are only used when Fieldbus is set to PROFINET.

3.14.4.1 Fieldbus

- The Fieldbus setting can be set to Off and PROFINET

  Default Fieldbus setting is PROFINET.

3.14.5 Commissioning PFEA122 on PROFINET

1. Perform a Fast Setup, see 3.8.1 or 3.8.2.
2. Set Fieldbus to PROFINET (which is the default setting), see Section 3.14.4.
3. Set PROFINET LoadDivision and FilterTime for the measure value that is sent to the Controller, see Section 3.14.4.
4. Connect PFEA122 to PROFINET and integrate it into a controller. Further communication setup is made from the Controller environment and is not described here. There are menus in PFEA122 Miscellaneous menu that show which IP address, Subnet mask and Gateway that the PLC has assigned to PFEA122 when communication has been established.

3.15 Commissioning of Optional Units

3.15.1 Insulation Amplifier PXUB 201

The insulation amplifier is connected to the tension electronics voltage output.
S1 is normally set for voltage 1:1 ratio.

The output is selected to generate a voltage or current output by means of switch S1 and S2.

Slower response is selected by means of switch S2, position 3.

The switches are located inside the unit.

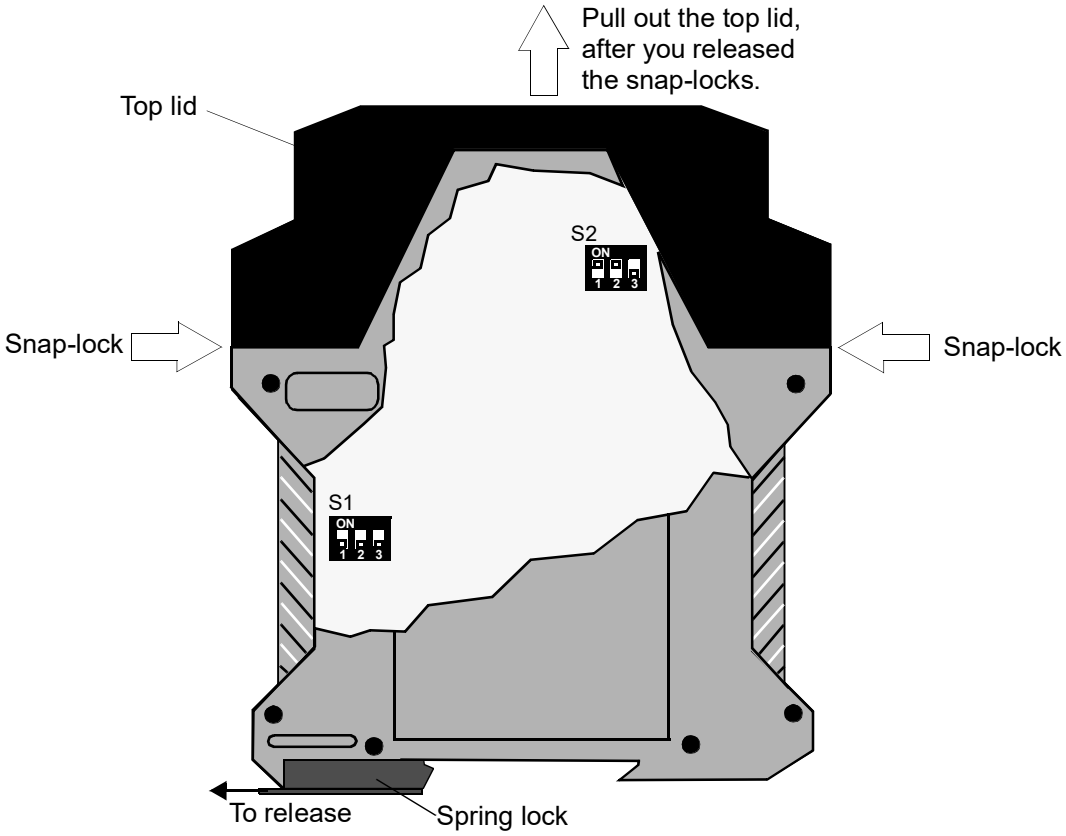

Figure 3-20. Insulation Amplifier PXUB 201

You must open the insulation amplifier to be able to set the switches S1 and S2.

1. Demount the insulation amplifier from the DIN rail.

   Use a screwdriver to unload the spring at the bottom of the insulation amplifier.
2. Press down the snap-locks on both sides of the insulation amplifier.
3. Pull the top lid open, until you see both the switches S1 and S2.

4. Set the switches S1 and S2.
5. Slide back the top lid to locked position.
6. Remount the insulation amplifier on the DIN rail.

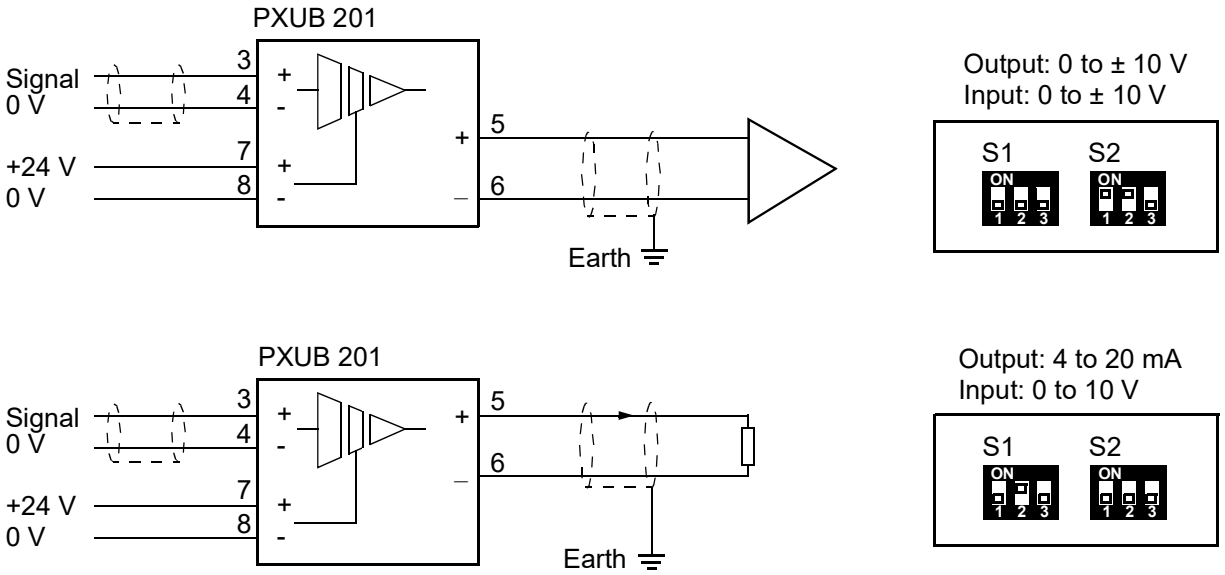

Figure 3-21. Typical Connection of the Insulation Amplifier

Table 3-10. Setting of Input and Output Range

Default	Range		S1			S2		
	Input	Output	1	2	3	1	2	3
×	0 to ±10 V	0 to ±10 V				×	×	
	0 to 5 V	4 to 20 mA	×					
	0 to 10 V	4 to 20 mA		×				
	0 to 5 V	0 to 20 mA	×	×				
	0 ± 10 V	0 ± 20 mA			×			

Table 3-11. Setting of Bandwidth

Default	**Bandwidth**	**S2, position 3** (× = ON)
×	10 kHz	
	10 Hz	×

Chapter 4 Operation

4.1 About this Chapter

Your measurement system does not need any attention during normal operation. Measurement runs continuously as long as the system is switched on. However, you need to know how to start and shut down the system, see Section 4.4 Start-up and shut-down.

4.2 Safety Instructions

Read and follow the safety instructions given in Chapter 1 Introduction, before starting any operation work. However, local statutory regulations, if stricter, are to take precedence.

4.3 Operating Devices

The LED-indicators and operator keys are described in Figure 4-1.

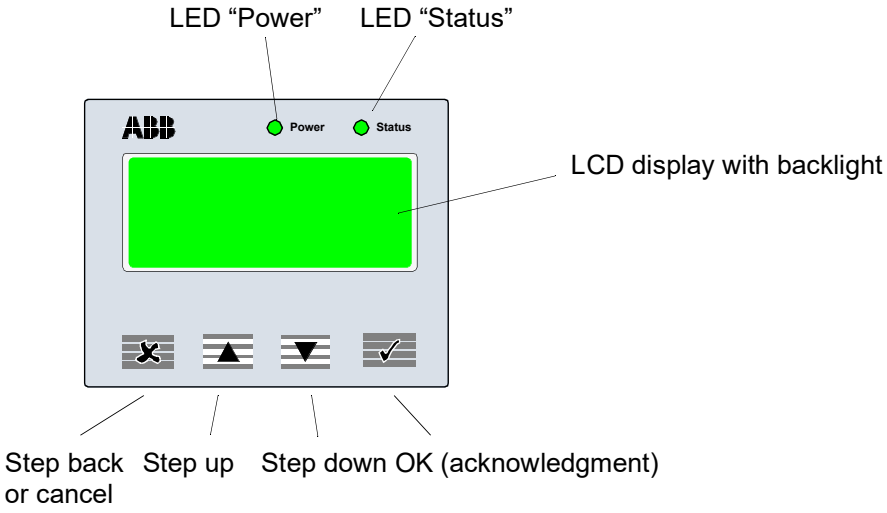

Figure 4-1. Operating Devices

NOTE

The status indicator will always be solid red for a PFEA122 when PROFINET is enabled and the PFEA122 is not exchanging cyclic process data with the controller. The status indicator becomes inactive (green) when the PROFINET controller has successfully established contact and the exchange of cyclic measure data is running.

4.4 Start-up and shut-down

4.4.1 Start-up

The tension electronics is started and shut down using an external ON/OFF switch (not supplied by ABB). During normal service, no action from the operator is required.

1. Check that the main tension control machinery is ready for normal run.
2. Switch on the tension electronics by setting the external ON/OFF switch to position ON. For the IP 65-version (NEMA 4) also set the internal switch to “ON”.
3. Check that:

   - the display is illuminated

   - the “Power” indicator is lit

   - the “Status” indicator is lit (green light). Red light indicates an error.

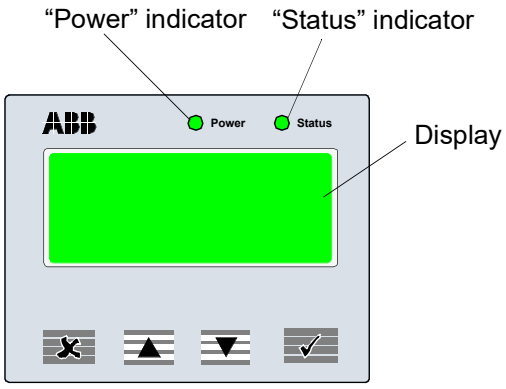

NOTE

When power is applied and controller is not connected to PROFIBUS/PROFINET, the status indicator is red.

4.4.2 Shut-down

Shut-down the tension electronics by setting the external ON/OFF switch to position OFF.

4.5 Normal Run

The measurement equipment should be permanently on to achieve best measuring result. This allows the load cells and electronics to operate under even temperature conditions.

The measuring equipment is designed for continuous duty.

4.6 Measuring values on the display

Depending on the selected unit, the measuring values will be presented differently, see Table 4-1 and Table 4-2.

Load cell nominal load	[N]	[kN]	[kg]	[lbs]
0.1 [kN]	XX XXX.X	XX.XXXX	X XXX.XX	X XXX.XX
0.2 [kN]	XX XXX.X	XX.XXXX	X XXX.XX	X XXX.XX
0.5 [kN]	XX XXX.X	XX.XXXX	X XXX.XX	X XXX.XX
1 [kN]	XXX XXX	XXX.XXX	XX XXX.X	XX XXX.X
2 [kN]	XXX XXX	XXX.XXX	XX XXX.X	XX XXX.X
5 [kN]	XXX XXX	XXX.XXX	XX XXX.X	XX XXX.X
10 [kN]	X XXX XX0	X XXX.XX	XXX XXX	XXX XXX
20 [kN]	X XXX XX0	X XXX.XX	XXX XXX	XXX XXX
50 [kN]	X XXX XX0	X XXX.XX	XXX XXX	XXX XXX
100 [kN]	X XXX X00	X XXX.X	XXX XX0	X XXX XX0
200 [kN]	X XXX X00	X XXX.X	XXX XX0	X XXX XX0

Table 4-1. Measuring values presented on the display.

Load cell nominal load	[N/m]	[kN/m]	[kg/m]	[pli]
0.1 [kN]	XX XXX.XX	XX.XXXXX	X XXX.XXX	X XXX.XXXX
0.2 [kN]	XX XXX.XX	XX.XXXXX	X XXX.XXX	X XXX.XXXX
0.5 [kN]	XX XXX.XX	XX.XXXXX	X XXX.XXX	X XXX.XXXX
1 [kN]	XXX XXX.X	XXX.XXXX	XX XXX.XX	XX XXX.XXX
2 [kN]	XXX XXX.X	XXX.XXXX	XX XXX.XX	XX XXX.XXX
5 [kN]	XXX XXX.X	XXX.XXXX	XX XXX.XX	XX XXX.XXX
10 [kN]	X XXX XXX	X XXX.XXX	XXX XXX.X	XXX XXX.XX
20 [kN]	X XXX XXX	X XXX.XXX	XXX XXX.X	XXX XXX.XX
50 [kN]	X XXX XXX	X XXX.XXX	XXX XXX.X	XXX XXX.XX
100 [kN]	X XXX XX0	X XXX.XX	XXX XXX	XXX XXX.X
200 [kN]	X XXX XX0	X XXX.XX	XXX XXX	XXX XXX.X

Table 4-2. Measuring values presented on the display.

X in Table 4-1 and Table 4-2 indicates that the figure is changed if the value is changed. 0 indicates that the value is not changed if the value changes.

Examples of measuring values displayed:

Example 1:

Selected unit [N], Load cell nominal load 100 kN, Measured value 987654 N.
Value presented on display: 987600 N.

Example 2:

Selected unit [kN], Load cell nominal load 100 kN, Measured value 987654 N.
Value presented on display: 987.6 kN.

Examples of measuring values displayed together with the Set Decimals function:

Example 1:

Selected unit [pli], Load cell nominal load 1 kN, Measured value 46.5987 pli.
Set Decimals = 2
Value presented on display: 46.60 pli.

Example 2:

Selected unit [pli], Load cell nominal load 1 kN, Measured value 46.5987 pli.
Set Decimals = 0
Value presented on display: 47 pli.

4.7 Operator Menus

This section describes the operator menus. The updating time for displayed values is 500 ms. Use up ▲ and ▼ to switch between menus.

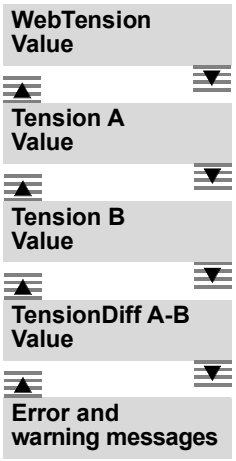

Figure 4-2. Operator Menus

4.7.1 Web Tension

4.7.1.1 Standard Roll (two load cells)

The following menus are available when a standard roll (two load cells) is connected to the tension electronics:

- **WebTension**

  Shows the total web tension measured by load cell A and load cell B

- **Tension A**

  Shows the part of web tension measured by load cell A

- **Tension B**

  Shows the part of web tension measured by load cell B

- **TensionDiff A-B**

  Shows the difference between Tension A and Tension B

4.7.1.2 Single Side A or Single Side B measurement (one load cell)

The following menu is shown when only one load cell (single side measurement) is connected to the tension electronics:

- **WebTension**

Web Tension is displayed for single side measurement.
Web tension is the tension measured by the connected load cell multiplied by 2.

If Single Side A is chosen as the object type, then the Profinet Web Tension A+B value will be equal to 2 x Web Tension A and Web Tension B will be equal to zero.

If Single Side B is chosen as the object type, then the Profinet Web Tension A+B value will be equal to 2 x Web Tension B and Web Tension A will be equal to zero.

4.7.2 Error and Warning Messages

An **ERROR** is something that causes the tension electronics to function incorrectly.

A **WARNING** is something that might affect the accuracy of the measurement.

When a warning or an error occurs, a warning or an error message is displayed on the Operator Panel and the “Status” indication turns from green to red.

When is pressed, the message disappears from the display.

If the problem that activated the warning or error message has disappeared the “Status” indication turns to green.

If the error or warning remains the “Status” indication is red. Use the to step to the last menu, where you can read the error or warning message.

For handling Error and Warning messages, see Chapter 6 Fault-tracing.

Chapter 5 Maintenance

5.1 About this Chapter

Under normal operating conditions, your system does not require any maintenance. However, we recommend regular checks. The following preventive measures may be taken depending on the type of environment in which your system operates.

5.2 Preventive Maintenance

Unit	Measures
Load cells 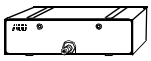	Protect the load cells from prolonged contact with corrosive elements.
	Check the fixing screws and re-tighten if necessary.
	Check the gaps between load cell and adapter plates to ensure that they are not clogged with dirt, which can cause a shunt force into the load cell. Clean the gaps with compressed air if necessary.
Tension Electronics	Check that the circuit boards are properly secured and that cables or wires are not damaged.
	Check that all terminal screws and cable glands are properly tightened.
Connection cables	Check that the connection cables between the load cells and the tension electronics are not damaged.

5.3 PFEA122 Firmware update

The PFEA122 field update tool is used to update the PFEA122 firmware in the eMMC flash drive in the PFEA122 PCB.

A Windows 10 host PC with 2 USB ports and terminal program installed. (PuTTY or TeraTerm) is required for the update.

When the Field Update Tool is installed and running using the Windows shortcut, the user does not need to interact with it in any way. The Field update tool will run and give information whether the firmware update has succeeded or failed.

The Field update tool contains both the field update program and the firmware files (they need to be flashed). With this design, it is easy to use the program. After installation, simply run the bat file or shortcut.

5.3.1 Connection of PFEA122 Field Update Tool

DANGER

Switch off and lock the mains operating switch to the tension electronics before performing any work on the tension electronics.

CAUTION

Handle the electronic unit carefully to reduce the risk of damage from Electric Static Discharge (ESD). Note the warning label on the circuit boards.

1. Remove the PFEA unit and place it on a work bench.
2. For IP 21devices - remove the plastic cover to have access to USB and serial interface. For Ip 65- open the plastic cover.
3. Connect the PFEA122 micro-USB connector to the PC using USB cable, see Figure 5-1.
4. Note; this step is optional, only for monitoring firmware upgrade in a terminal program. Connect the serial cable between the PFEA122 and PC by using the FTDI USB-RS232 converter cable.

   The serial port provides a serial console to monitor the upgrade procedure. It is not mandatory. On the board, the serial port is a 3-pin connector. Baudrate is 115200 bps, 8 bit data, no parity, 1 bit stopbit, no flow control.

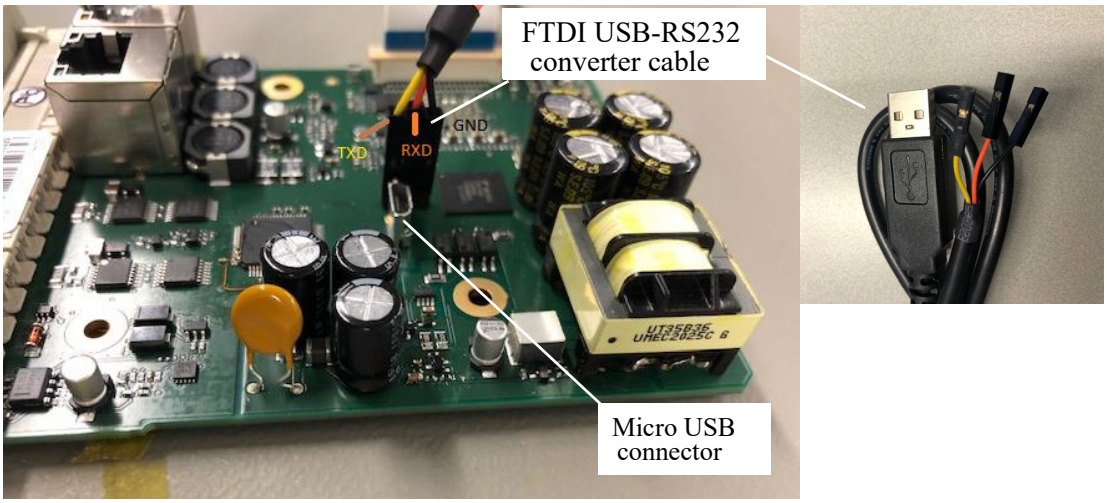

Figure 5-1. Serial port and micro USB connector

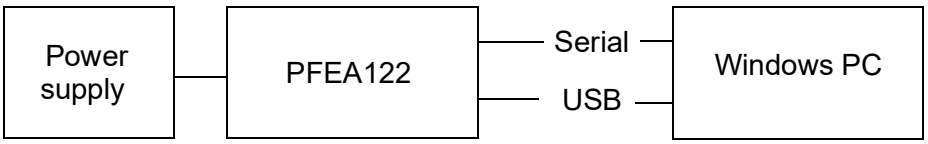

Figure 5-2. Overview of required HW

5. Launch a serial console session on your PC using PuTTY or TeraTerm to observe output of the PFEA122 boot sequence. The boot sequence outputs the following traces on serial output. Below is an example, Version, Build Timestamp, Board Revision and CRC may differ from this instruction:

```
PFEA12X Boot Loader
Version 0.8.0.0
Build Timestamp: Jun 20 2022 13:28:45
Board Revision: 1
Using application [1:profinet-app]
Loading binary to RAM....Done.
Read 870872 / 870872 bytes. CRC 0x4960c999
Jumping to PFEA12X Application...
```

Figure 5-3. Serial console output during the boot sequence

5.3.2 Installation of the Field Update Tool

1. Make sure to uninstall any previous versions of Field Update tool which may be installed in the host computer (see Figure 5-4):

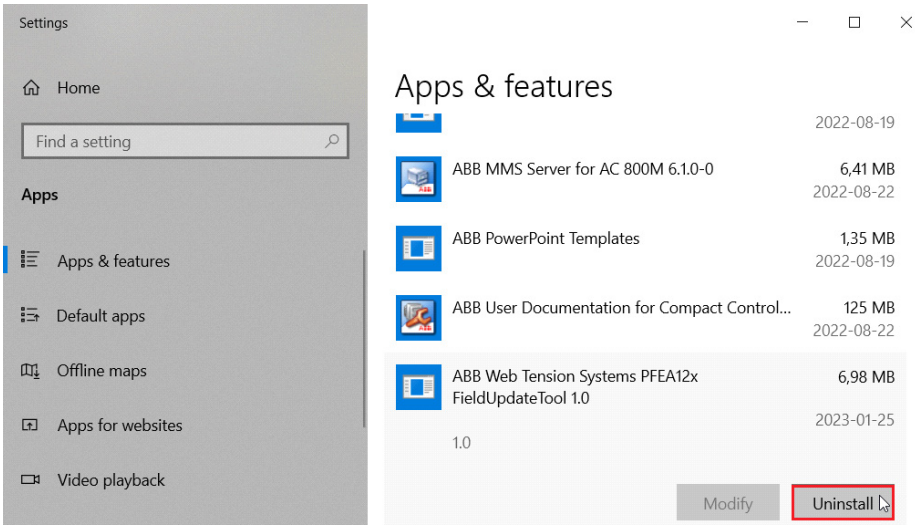

Figure 5-4. Uninstallation of Field Update Tool

2. Run the PFEA12x FieldUpdateTool 1.0.exe install file, see procedure below. The program version number may differ from these pictures.

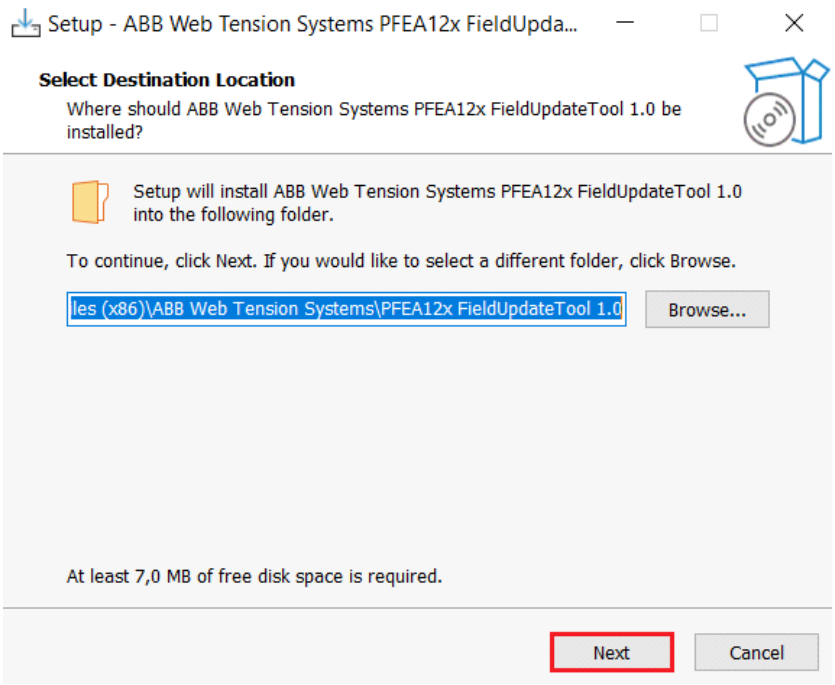

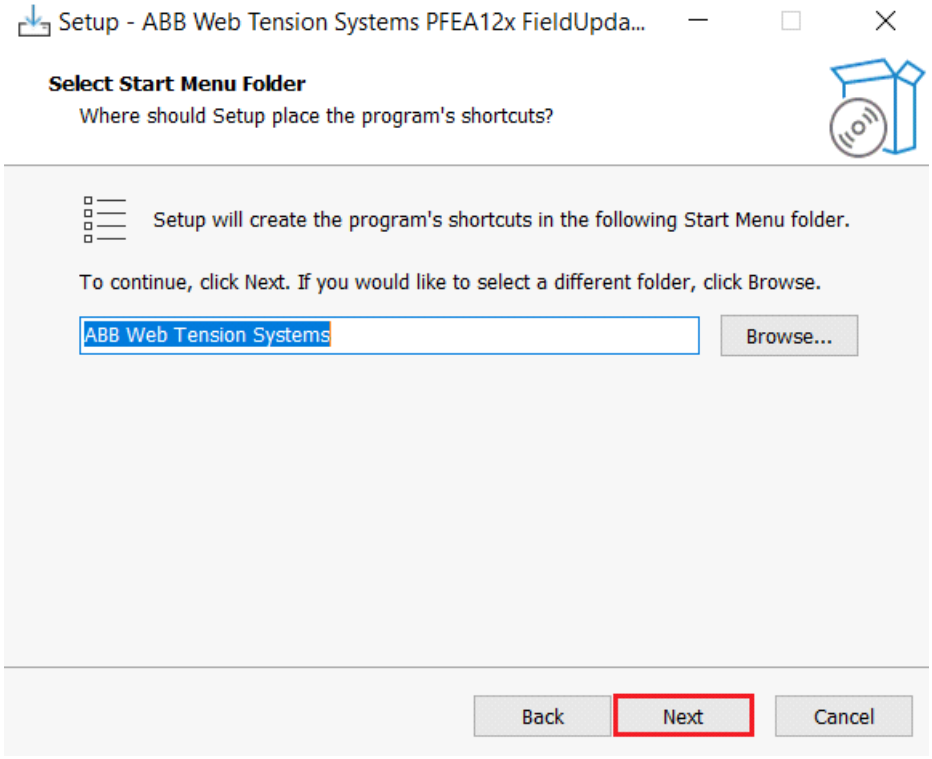
Setup - ABB Web Tension Systems PFEA12x FieldUpda...
Select Start Menu Folder
Where should Setup place the program's shortcuts?
Setup will create the program's shortcuts in the following Start Menu folder.
To continue, click Next. If you would like to select a different folder, click Browse.
ABB Web Tension Systems
Browse...
Back
Next
Cancel

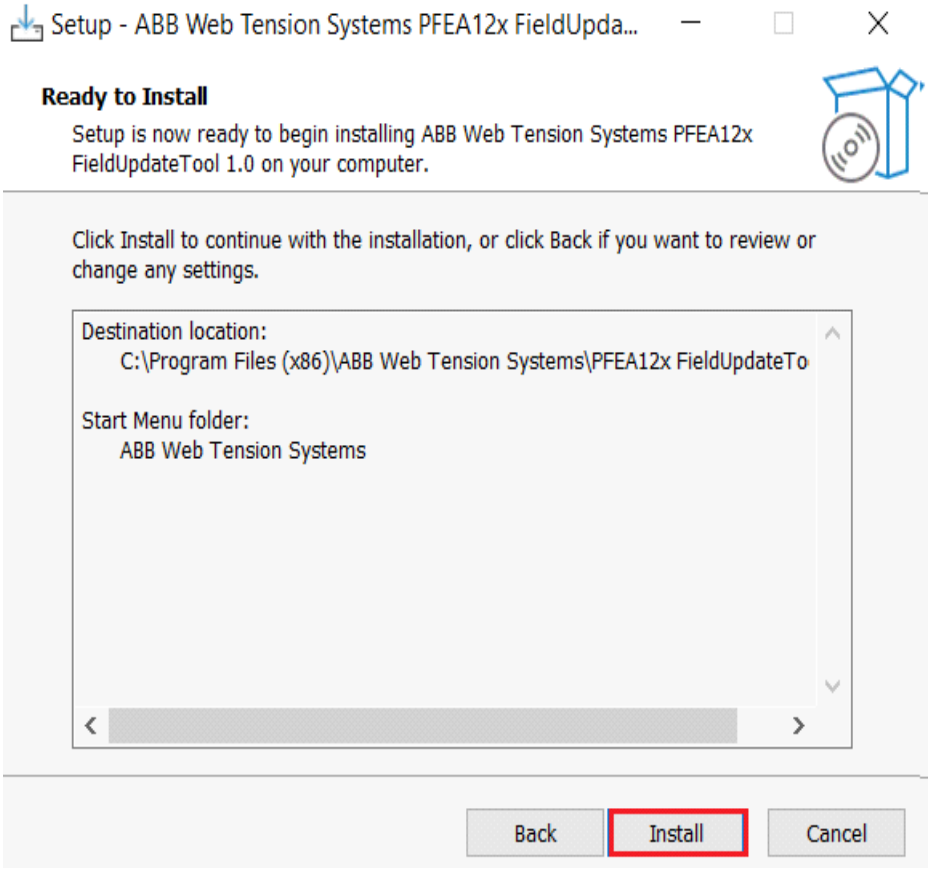
Setup - ABB Web Tension Systems PFEA12x FieldUpda...
Ready to Install
Setup is now ready to begin installing ABB Web Tension Systems PFEA12x FieldUpdateTool 1.0 on your computer.
Click Install to continue with the installation, or click Back if you want to review or change any settings.
Destination location:
C:\Program Files (x86)\ABB Web Tension Systems\PFEA12x FieldUpdateTo
Start Menu folder:
ABB Web Tension Systems
Back
Install
Cancel

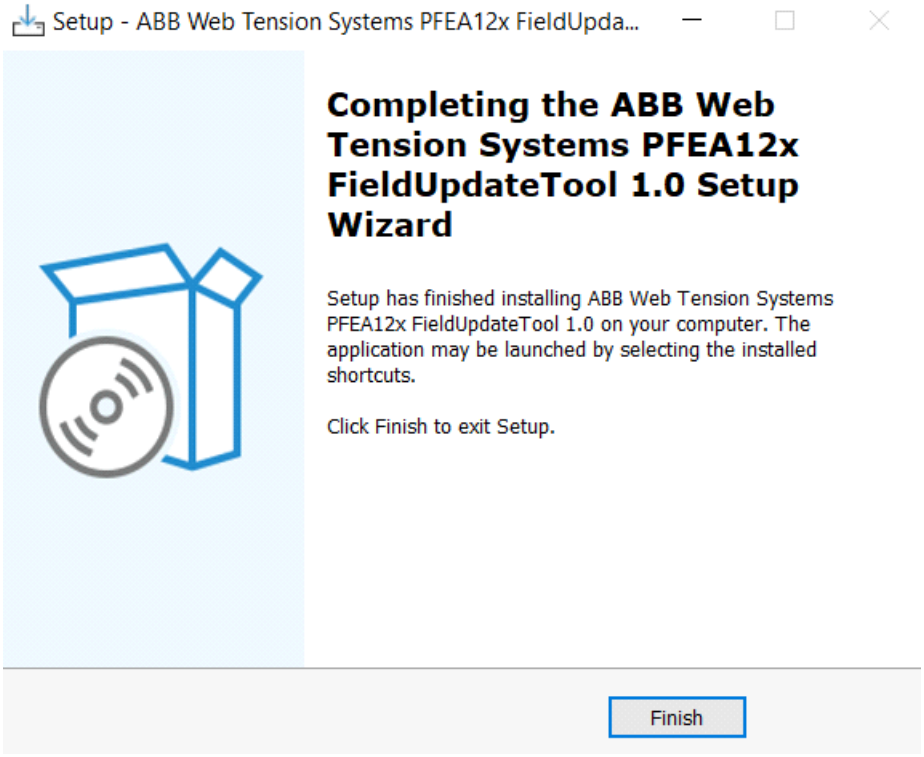

5.3.3 Startup of the PFEA122 USB-EMMC Firmware update application

1. Make sure electrical power to the PFEA122 is off.
2. Make sure the Serial port to the PC is connected correctly.
3. Open a console program (for example PuTTY or Tera Term), and connect to the COM port that Windows created for the serial port, using baud rate 115200 bps, 8 bit data, no parity, 1 bit stop bit, no flow control)
4. Make sure the USB cable is connected to the PFEA122 and Windows PC.
5. Apply power on the PFEA122 and wait for it PFEA12x to start. If any error messages are displayed, acknowledge them by pressing the “ok” button.
6. Press the “ok” button 5 seconds on the PFEA122, to get access to more menus.
7. Navigate to the “Miscellaneous Menu” in the HMI and press the “Ok” button. Choose “SetFirmwareUpdate” and select “Yes”. The PFEA122 will now reboot.

   The PFEA122 reboots and enters USB mass storage device mode. "Firmware Update" is written in the HMI LCD.

   The green status LED is flashing with 1Hz frequency. The green power LED is on. The red status LED is off.

In the serial console, the output must be as below (version, timestamp and CRC may differ):

```
PFEA12X Boot Loader
Version 0.8.0.0
Build Timestamp: Jun 20 2022 13:28:45
Board Revision: 1
Using application [0:USB-EMMC-app]
Loading binary to RAM.............Done.
Read 3162128 / 3162128 bytes. CRC 0xdc487dfc
Jumping to PFEA12X Application...

----------------------------------------

PFEA 122V1 Firmware Update Application

Version 0.8.0.0

Build Timestamp      : Jun 20 2022 13:29:06

----------------------------------------
```

Figure 5-5. Serial console output when running the PFEA122 USB-EMMC firmware update application

When the PFEA122 USB-EMMC Firmware Update application is running and the micro USB cable is connected to the Windows PC, the PFEA122 will be displayed as mass storage device and the following disks become available:

- BOOT disk, size 64 MB
- PARTA disk, size 128 MB

Figure 5-6. PFEA122 BOOT and PARTA partitions

NOTE

The partition labels (P and Q in Figure 5-6) may differ from this instruction.

5.3.4 Update of the PFEA122 application Firmware with Field update Tool

To run Field Update Tool, the bat script can be executed. The bat script pfea12x_fieldupdatetool.bat is located in this folder: C:\Program Files (x86)\ABB Web Tension Systems\PFEA12x FieldUpdateTool 1.0 (The version number in the path described above may differ from this instruction)

Another way to run Flash tool is with the short cut shown in Figure 5-7:

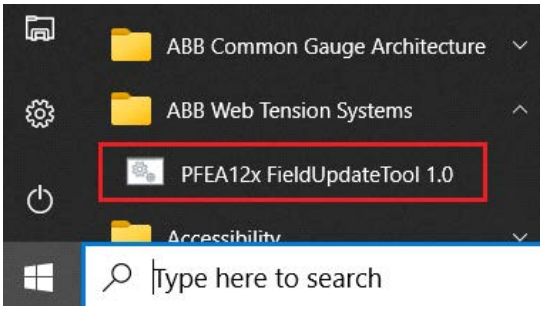

Figure 5-7. Field Update Tool Windows shortcut

Below is an example of the output in the serial console when running the field update tool.

```
**********************************************************
*
*  Firmware: 0.8.0.6
**********************************************************

Finding PFEA12x...OK
Updating boot...OK
Updating application...OK

SUCCESSFULLY updated firmware

 Press any key to continue . . .
```

1. After running the Field Update Tool, remove and apply the power to the PFEA122, and observe in the serial console that the bootloader and PFEA122 application has started, and the firmware version number is correct (see Figure 5-8).
2. Check in the PFEA122 HMI that the firmware version is correct (in the service menu).

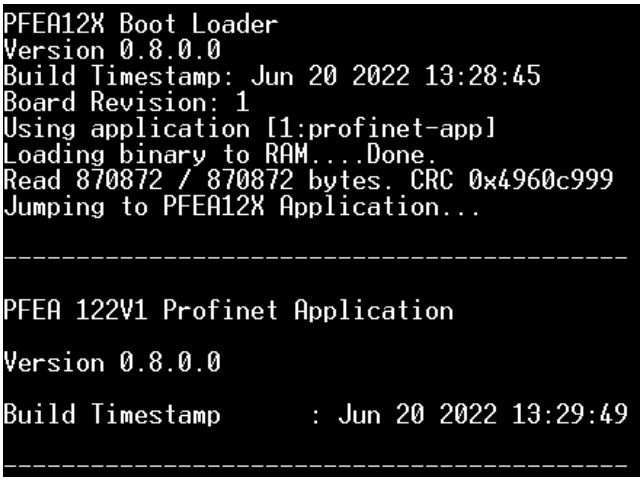

Figure 5-8. The PFEA122 is now running the updated application and ready for use.

3. After the firmware update is completed, remove power from the PFEA122.
4. Remove the USB cable.
5. Reinstall the plastic cover (IP 20 unit), or close the cover (IP 65).

5.3.5 Firmware manual update

CAUTION

It is advised to not manually remove or modify any files in the PARTA or BOOT partitions. But if the firmware update using Field Update Tool did not work for any reason, follow this manual firmware update procedure.

1. Follow the instructions in Section 5.3.3 Startup of the PFEA122 USB-EMMC Firmware update application
2. Delete all files in the BOOT disk.
3. Copy all files from this folder:
   C:\Program Files (x86)\ABB Web Tension Systems\PFEA12x FieldUpdateTool 1.0\emmc\boot to the BOOT disk
4. Delete all files in the PARTA disk.
5. Copy all files from this folder:
   C:\Program Files (x86)\ABB Web Tension Systems\PFEA12x FieldUpdateTool 1.0\emmc\parta to the PARTA disk
6. Remove and apply power to the PFEA122 and observe the output in the serial console. Check that the firmware version is correct in the console and in the service menu in the HMI.

NOTE

In steps (2) and (4), it is important to copy all files inside the folder and not the folder itself.
The Field Update Tool version number in the folder paths described in steps (2) and (4) may differ.

Chapter 6 Fault-tracing

6.1 About this Chapter

During the working life of your measurement system, events may occur that disturb it and your process. These disturbances may appear in many different ways and the reason for the fault can be difficult to find. However, disturbances similar in character can be grouped together and usually they have the same or similar sources of error.

The fault-tracing instructions in this chapter will help you to quickly find and correct the most common faults.

6.2 Safety Instructions

Read and follow the safety instructions given in Chapter 1 Introduction when tracing faults. However, local statutory regulations, if stricter, are to take precedence.

6.3 Interchangeability

Unit	Measures
Tension Electronics	The tension electronics PFEA111/112/122 is interchangeable with a tension electronics of the same type. A new setup is required.
Load cells 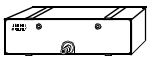	The load cells are directly interchangeable with other load cells of the same type. Zero setting PFEA111/112/122 and resetting “Maximum Load A” or “Maximum Load B” is required after a load cell has been replaced.

6.4 Necessary Equipment and Documentation

The following items are required to perform fault-tracing and repairs:

- Cable diagrams, see Appendix (B, C, D, E, F or G) for installed load cell type
- Service tools
- Torque wrench
- Multimeter

6.5 Fault-tracing Procedure

Faults in the...	Fault symptoms
Mechanical installation 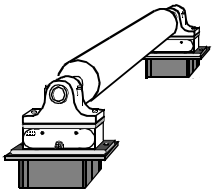	Faults in the mechanical installation usually manifest themselves as an unstable zero point or incorrect sensitivity. If a fault is associated with a process parameter, such as the temperature, or can be linked with a particular operation, the fault is likely to emanate from the mechanical part of the installation.
Load cells 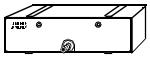	Calibration data for a load cell do not change gradually. A load cell, depending on its size and type, can withstand up to five times(1) the nominal load in the measuring direction. An event in the process line, such as web breakage, may cause an overloading large enough to alter load cell data. Depending on the amount of overload, it may be sufficient to zero set.
Cabling	Problems such as malfunctions or unstable zero point may arise from faulty cables or wiring. Proximity to noisy cables may cause interference problems. Incorrect installation, such as cable cores connected asymmetrically or screens earthed at both ends instead of only at one end, may show up as an unstable zero point. If the polarity of load cell signals is not correct, the cabling must be checked.
Tension Electronics 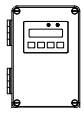	Intermittent loss of a function is usually due to a fault in the tension electronics. Instability problems seldom originate from the tension electronics. Faults in devices connected to the tension electronics may affect its operation.

(1) Read more about the overload capacity for your load cell type in Appendix B, C, D, E, F or G.

6.6 Error and Warning Messages in PFEA111/112/122

An **ERROR** is something that causes the electronics to function incorrectly.

A **WARNING** is something that might affect the accuracy of the measurement.

When a warning or an error occurs, a warning or an error message is displayed on the Operator Panel and the “Status” indication turns from green to red.

When is pressed the message disappears from the display.

If the problem that activated the warning or error message has disappeared the “Status” indication turns to green.

If the error or warning remains the “Status” indication is red. Use the to step to the last operator menu, where you can read the error or warning message.

6.6.1 Error Messages

The following errors can be detected:

- Flash (memory) error
- EEPROM (memory) error
- Supply error
- Load cell excitation error

See Section 6.8 Warnings and Errors Detected by the Tension Electronics.

6.6.2 Warning Messages

The following warnings can be detected:

- PROFIBUS communication problem
- PROFINET communication problem
- Synchronization problem

See Section 6.8 Warnings and Errors Detected by the Tension Electronics.

6.7 Fault Symptoms and Measures

General remark:

If the free (unscreened) cable length exceeds 0.1 m (4 in.) the individual pairs of power and signal conductors must be twisted.

Free length exceeding 0.1 m can cause unstable zero point or incorrect absolute measurement value.

Table 6-1. Fault Symptoms and Measures

Fault symptom	Measures
Noisy signals	- Check that cable shields are connected to earth according to cable diagram. - Proximity to noisy cables can cause interference problems.
Unstable zero point	- Check that cable screens are not connected in both ends. - Check that cable between load cell and electronic has diagonal pairs, one pair for signal circuit and one par for excitation circuit, see Figure 2-2. - Check, if a junction box is installed, that load cell signal and load cell excitation between junction box and electronics are routed in separate cables. - Check, if two or more IP 20 units are mounted close to each other in the same cabinet, that they are synchronized (cable for synchronizing the units, see cable diagram and Section 2.4.1.3 Synchronization).
Display and LED indictors are not illuminated	If the Operator panel display is not illuminated and the “Power” and “Status” indications on the Operator Panel are “OFF”, check the following: - Check that the cables are correctly connected to the electronics power supply. - Check that the power supply connected to the electronics is correct. - Check that the power switch is “ON” (inside the IP 65-version (NEMA 4) enclosure). - Further tests are described in Section 6.8.1.3 Supply Error.

Table 6-1. Fault Symptoms and Measures

Fault symptom	Measures
No signal when load is applied	**1**. Check that cables to the electronics are correctly connected. **2**. Check that the load cells are connected with correct polarity. If not, the load cell signals cancel out each other. This is displayed on the operator panel as described below: **a**. The sum signal (A+B) is low **b**. The difference signal (A-B) is high **c**. The output signal of the individual load cells have opposite signs (polarity) when a force is applied on the middle of the roll. To check load cell signal polarity, see Section 3.9 Checking Load Cell Signal Polarity For connecting the load cells to give positive signals for increased web tension, see cable diagram for the installed load cell type. **3**. Switch off the tension electronics and measure the cable resistance in the load cell signal circuit between terminals X1:5 and X1:6 and between X1:9 and X1:10. **a**. The resistance is > 25 Ω: Check cabling and load cells. **b**. The resistance is < 25 Ω: Check the mechanics.

6.8 Warnings and Errors Detected by the Tension Electronics

6.8.1 Errors

6.8.1.1 Flash Memory Error

- Replace PFEA111/112/122.

6.8.1.2 EEPROM Memory Error

- Replace PFEA111/112.

6.8.1.3 Supply Error

IP 20-version (unsealed):

When the PFEA111/112/122 is connected to the 24 VDC power supply the voltage between terminals X1:1 and X1:2 should be 18 - 36 V.

- If the voltage is lower than 18 V:
  - Check the power supplies rating. Rating should be 18-36 V DC.
  - Check that the power supply has sufficient capacity. See power requirements in Section 2.8.2 Power Supply Unit SD83x.
- If the power supply has sufficient capacity, check cabling and cable resistance between power supply and PFEA111/112/122.
- If power supply and cabling are correct, the tension electronics is probably defect.

  Replace PFEA111/112/122.

IP 65-version (NEMA 4):

- Check the mains voltage connected to terminals X9:1 and X9:2.

  Mains voltage must be:

  85 - 264 V AC (100 V -15% to 240 V +10%)

  Frequency range: 45 - 65 Hz

6.8.1.4 Load Cell Excitation Error

- Check that cables are correctly connected to the electronics.
- If single side measurement is used and only load cell A or load cell B is connected to the electronics, check that a shorting wire is connected between terminals X1:7 and X1:8 or X1:3 and X1:4.
  - Switch off the tension electronics and measure the resistance between terminals X1:3 and X1:8.

    The resistance is > 8 Ω:

    Check that the total cable resistance between electronics and load cells does not exceed 5 Ω. If cable resistance does not exceed 5 Ω, check cabling and load cells.

    The resistance is < 7 Ω:

    If cabling is correct, the electronics is probably defect.

    Replace PFEA111/112/122.

6.8.2 Warnings

6.8.2.1 PROFIBUS Communication Problem

Check:

- That the bus is correctly terminated.
- The PROFIBUS address.
- Cabling and connectors.

6.8.2.2 PROFINET Communication Problem

Check:

- Cabling and connectors
- Check that Fieldbus is set to PROFINET
- Verify that the PLC has established communication with PFEA by checking the IP address, see Section 3.14.4 Miscellaneous Menu PFEA122

NOTE

Fault tracing of PROFINET is normally done from the PLC that is PROFINET Controller, and is out of scope for this manual.

6.8.2.3 Synchronization Problem

Check the cabling and shield.

If the cabling is correct the tension electronics is probably defect.

Replace PFEA111/112/122.

6.8.3 Changing to Single Side Measurement If One Load Cell Is Faulty

If one load cell is faulty it is possible to change from Standard Roll to Single Side Measurement.

For load cell connections, please refer to cable diagrams in Appendix B, C, D, E, F or G for the load cell type used in the installation.

Depending on which load cell that is faulty, do the following:

Load cell A is faulty:

1. Disconnect load cell A from the Tension Electronics.
2. Connect a shorting wire for the load cell excitation circuit between X1:3 and X1:4.

Load cell B is faulty:

1. Disconnect load cell B from the Tension Electronics.
2. Connect a shorting wire for the load cell excitation circuit between X1:7 and X1:8.

After having changed the load cell connections, one parameter setting in the Tension Electronics must be changed.

Use the menu below to change from ***StandardRoll*** to ***Single Side A*** or ***Single Side B***.

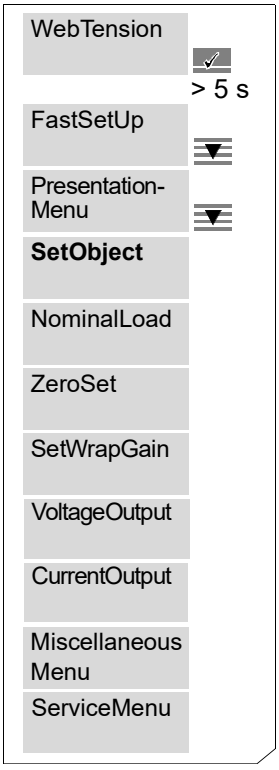

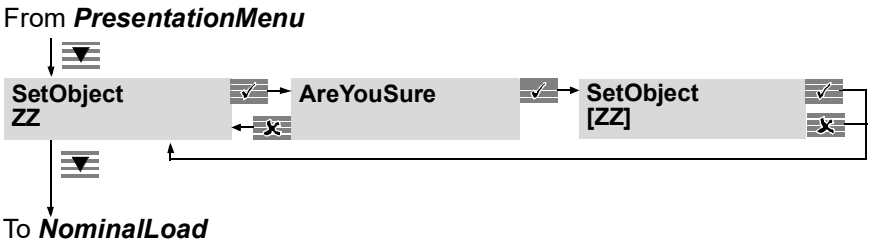

Single Side A measurement
One load cell signal

Single Side B measurement
One load cell signal

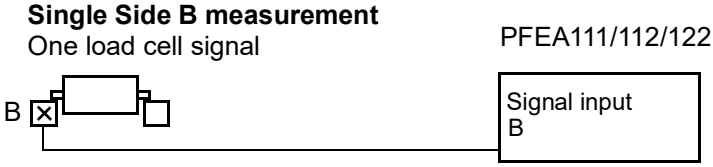

6.9 Changing Load Cells

1. Before starting work, read the safety instructions stated in Chapter 1 Introduction.
2. For load cells equipped with an extension cable and connector:
   Disconnect the connection cable from the load cell and protect the connection cable from dirt and damage.

   For load cells equipped with a fixed cable:
   Disconnect the load cell connection in the tension electronics or junction box and protect the loose cable ends from dirt and damage.
3. Clean the old load cell before it is unfastened and removed.
4. Unfasten and remove the old load cell.
5. Unfasten and remove the adapter plates from the old load cell.
6. Clean the support structure, adapter plates and other mounting surfaces.
7. For mounting instructions for the new load cell, see:
   - Appendix B PFCL 301E - Designing the Load Cell Installation
   - Appendix C PFTL 301E - Designing the Load Cell Installation
   - Appendix D PFRL 101 - Designing the Load Cell Installation
   - Appendix E PFTL 101 - Designing the Load Cell Installation
   - Appendix F PFCL 201 - Designing the Load Cell Installation
   - Appendix G PFTL 201 - Designing the Load Cell Installation
8. Set the zero point, see Section 3.12.4 Zero Set.

Appendix A Technical Data for Tension Electronics PFEA111/112/122

A.1 About this Appendix

This appendix comprises technical data for tension electronics PFEA111/112/122.

Data for the load cells are given in:

- Appendix B PFCL 301E - Designing the Load Cell Installation
- Appendix C PFTL 301E - Designing the Load Cell Installation
- Appendix D PFRL 101 - Designing the Load Cell Installation
- Appendix E PFTL 101 - Designing the Load Cell Installation
- Appendix F PFCL 201 - Designing the Load Cell Installation
- Appendix G PFTL 201 - Designing the Load Cell Installation

The definitions used in the load cell appendices are explained in Section A.2.

A.2 Definitions used in the Web Tension Systems

Table A-1. Definitions

Nominal load, F_{nom}, is the load for which the load cell is dimensioned and calibrated, that is the sum of the stationary load and the maximum measured load in the measuring direction.	Linearity deviation 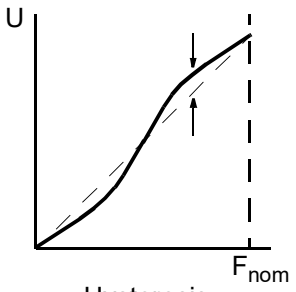
$\mathbf{F_{ext}}$ = Extended range. Between $\mathbf{F_{nom}}$ and $\mathbf{F_{ext}}$ some decline in measurement accuracy may be experienced.	
Sensitivity is defined as the difference in output signal between nominal load and no load.	
Accuracy class is defined as the maximum deviation and is expressed as a percentage of the sensitivity at nominal load. This includes linearity deviation, hysteresis and repeatability error.	Hysteresis 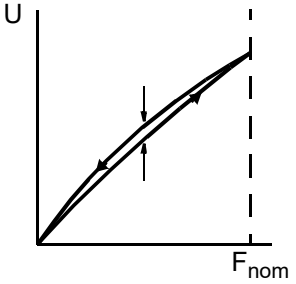
Linearity deviation is the maximum deviation from a straight line drawn between the output values of zero and nominal load, related to the nominal load.	
Hysteresis is the maximum deviation of the output signal at the same load during a cycle from zero to nominal load and back to zero, related to the sensitivity at nominal load. The hysteresis is proportional to the cycle.	Temperature dependence 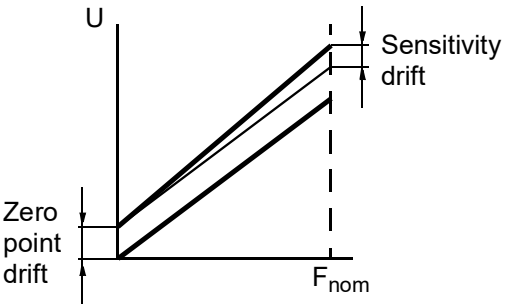
Repeatability error is defined as the maximum deviation between repeated readings under identical conditions. It is expressed as a percentage of the sensitivity at nominal load.	
Temperature dependence is the drift in %/K related to the sensitivity at nominal load.	
Zero point drift is defined as the drift in the output signal when there is no load on the load cell.	
Sensitivity drift is defined as the drift in the output signal at nominal load, excluding the zero point drift.	

Table A-1. Definitions

T = Web tension.	**Example:** 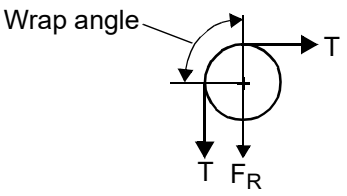
Tare = Force of tare (weight of roll and bearing arrangement mounted on the load cells)	
$\mathbf{F_R}$ = Measured force (force component of the web tension in the measuring direction of the load cell).	
$\mathbf{F_{RT}}$ = Applied force component of tare in the measuring direction of the load cell.	
$\mathbf{F_{Rtot}}$ = Total applied force in the measuring direction of the load cell.	$\mathbf{F_R = T}$ Wrap gain = $\frac{T}{F_R}$ Wrap gain = $\frac{T}{T}$ = 1.00 Wrap gain = 1.00
Wrap Gain = The ratio between web tension, **T**, and measured force, $\mathbf{F_R}$.	

A.2.1 Coordinate System

A coordinate system is defined for the load cell. This is used in force calculations to derive force components in the load cell principal directions.

Where direction designations R, V and A are recognized as suffixes for force components, F, this represents the force component in the respective direction. The suffix R may be omitted, when measuring direction is implied by the context.

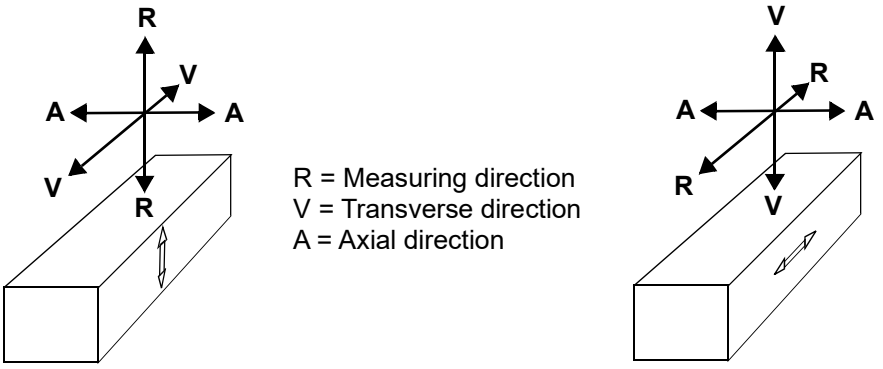

Figure A-1. Coordinate System Defining Directions used in Force Calculations

A.3 Technical Data

Table A-2. Data for Supply Voltage

	Data	Comments
Supply voltage		
IP 20-unit (unsealed)	24 V DC *	18 - 36 V DC
IP 65-unit (NEMA 4)	24 V DC *	18 - 36 V DC
	85 - 264 V AC	100 V -15% to 240 V +10%
Mains frequency	47 - 63 Hz	100 - 240 V AC, 0.2 - 0.1 A
Power consumption	8 W (24 V)	
Fuse		
IP 20-unit (unsealed)	Automatic reset	
IP 65-unit (NEMA 4)	Slow blow, 2 A, 250 V	

Table A-3. Data for Load Cell Excitation

	Data	Comments
Current	0.5 A rms, 330 Hz	Regulated
Max. load	Two load cells + max. 5 Ω cable resistance (1 μF cable capacitance).	Load cells of type: PFCL 301E, PFTL 301E, PFRL 101 and PFTL 101. PFCL 201, PFTL 201.

Table A-4. Data for Load Cell Inputs

	Data	Comments
Number of inputs	2	
Input impedance	10 kΩ	

* The +24V power supply must be isolated from the AC mains supply and designed not to be subjected to transient voltage (that means reliable grounded capacitively-filtered DC secondary circuits). ABB SD83X or similar power supply units inside cubicle fulfills these requirements.

Table A-5. Data for Signal Outputs

	Data	Comments
Voltage output	0 - 10 V	Range -5 to +11 V
Max. load	5 mA	
Ripple	<10 mV_{p-p}	Wrap gain = 1
Step response time	15 ms	
Band width	35 Hz	
Current output	4 - 20 mA	Range 0 to 21 mA
Max. load	550 Ω	
Step response time	15 ms	
Band width	35 Hz	
Extra filtering for voltage and current output		
Filter setting	30 ms 75 ms 250 ms 750 ms 1500 ms	
Cut-off frequency	15 Hz 5 Hz 1.5 Hz 0.5 Hz 0.25 Hz	
Wrap gain adjustment	0.5 - 20	

Table A-6. Measurement Ranges for the Tension Electronics

Type	Range (1)
Zero Setting Range	$\pm 2.0 \times F_{nom}$
Dynamic Measurement Range (including zero set)	$-2.5 \times F_{nom}$ to $+ 3.5 \times F_{nom}$

(1) F_{nom} = Load cell nominal load

Table A-7. Communication PFEA112

	Data	Comments
PROFIBUS	1	12 Mbit
Communication protocol	PROFIBUS DP slave	According to EN 50 170
Transfer speed	Max. 12 Mbits / s	
Address range	0 - 125	

Table A-8. Communication PFEA122 PROFINET

PROFINET Data	Properties
Communication protocol	PROFINET device
Transfer speed	100Mbits/s
Realtime Class	RT
Protocols	SNMPv1 and SNMPv2, LLDP, DCP
Application Relationships	IO-Controller and IO-Supervisor
Certificate	PNIO Version 2.42, Netload class 2, Conformance class B
I&M records	I&M0 (Read Only) to I&M3 (Read/Write)

Table A-9. Dimensions

	Data	Comments
Dimensions		
IP 20-version (unsealed)	86 x 136 x 58	Width x Height x Depth
IP 65-version (NEMA 4)	120 x 180 x 100	Width x Height x Depth
Weight		
IP 20-version (unsealed)	0.3 kg	
IP 65-version (NEMA 4)	1.9 kg	

A.4 Factory Default Settings

Table A-10. Factory Default Settings

	PFEA111	PFEA112	PFEA122
Display language	English	English	English
Display unit	N	N	N
Set Decimals	0	0	0
Load cells per roll	2	2	2
Object type	Standard roll	Standard roll	Standard roll
Load cell nominal load	1.0 kN 225 lbs	1.0 kN 225 lbs	1.0 kN 225 lbs
Wrap gain	1	1	1
Current output			
Filter setting	250 ms	250 ms	250 ms
High tension	2000 N	2000 N	2000 N
High output	20.00 mA	20.00 mA	20.00 mA
Low tension	0 N	0 N	0 N
Low output	4.00 mA	4.00 mA	4.00 mA
High limit	21.00 mA	21.00 mA	21.00 mA
Low limit	0.00 mA	0.00 mA	0.00 mA
Voltage output			
Filter setting	250 ms	250 ms	250 ms
High tension	2000 N	2000 N	2000 N
Low tension	0 N	0 N	0 N
High output	+10.00 V	+10.00 V	+10.00 V
Low output	0.00 V	0.00 V	0.00 V
High limit	+11.00 V	+11.00 V	+11.00 V
Low limit	-5.00 V	-5.00 V	-5.00 V
PROFIBUS	-	Off	-
Address	-	126	-
PROFINET	-	-	
Enabled	-	-	On

	PFEA111	**PFEA112**	**PFEA122**
FilterTime	-	-	250 ms
LoadDivision	-	-	0.001N

A.5 Optional Units

A.5.1 Insulation Amplifier PXUB 201

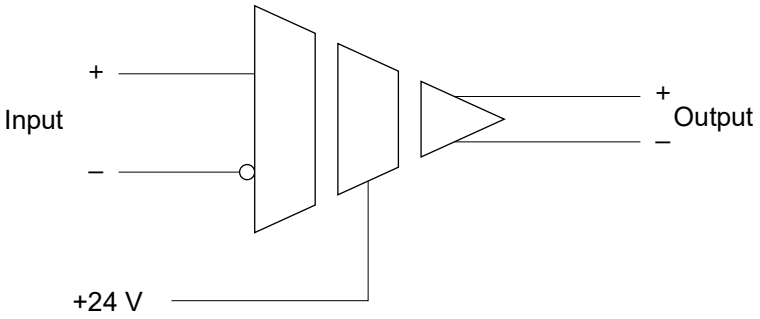

Figure A-2. Insulation Amplifier PXUB 201

Table A-11. Data for Insulation Amplifier PXUB 201

Type	Data	
Power supply	20 - 253 V AC/DC AC: 48 - 62 Hz, 2 VA DC: 1 W	
Current consumption	10 mA + external load, at 24 V	
Signal range	Input	Output
	0 ± 10 V	0 ± 10 V
	0 - 10 V	4 - 20 mA
	0 - 5 V	4 - 20 mA
	0 ± 10 V	0 ± 20 mA
	0 - 5 V	0 - 20 mA
Input resistance	1 MΩ at 10 V input 500 kΩ at 5 V input	
Max. load	10 mA for voltage output 500 Ω for current output	
Rise time	50 μs or 50 ms, selectable	
Ripple	10 mV_{p-p}	
Bandwidth (-3 dB)	10 kHz or 10 Hz	
Rated insulation voltage	600 V, basic insulation	
Insulation test voltage	4 kV	
Dimensions (l × w × d)	99 × 12.5 × 111 mm	

Table A-11. Data for Insulation Amplifier PXUB 201

Type	Data
Weight	150 g
Mounting	DIN-rail 35 mm

A.5.2 Power Supply Unit SD83x

Table A-12. Mains Supply Voltage

	Data	Remarks
Mains supply voltage	115 V AC (90 - 132 V), 100 V -10% to 120 V + 10% 230 V AC (180 - 264 V), 200 V -10% to 240 V + 10%	Auto-select

Table A-13. Power Supply Unit

Unit	Dimensions (l x w x d)	Weight
SD831	124 x 35x 102 mm	0.43 kg
SD832	124 x 35x 117 mm	0.5 kg
SD833	124 x 60x 117 mm	0,7 kg

The power supply unit is intended to be installed on a 35 mm DIN-rail.

A.5.3 Junction Box PFXC 141

Degree of protection	Dimensions (l x w x d)	Weight
IP 65 (NEMA 4)	220 x 120 x 80 mm	2.0 kg

The junction box PFXC 141 is intended to be installed on a wall.

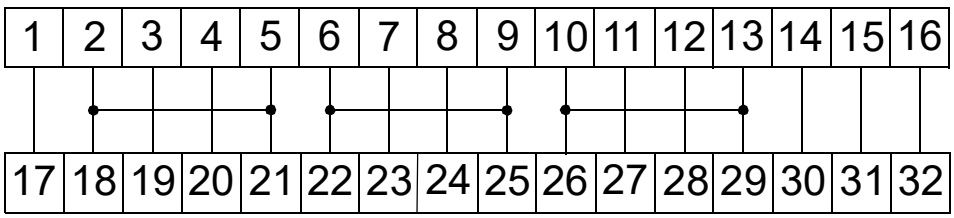

Figure A-3. Circuit Diagram for Junction Box PFXC 141.

A.6 Drawings

A.6.1 Dimension Drawing 3BSE017052D64, Rev. D

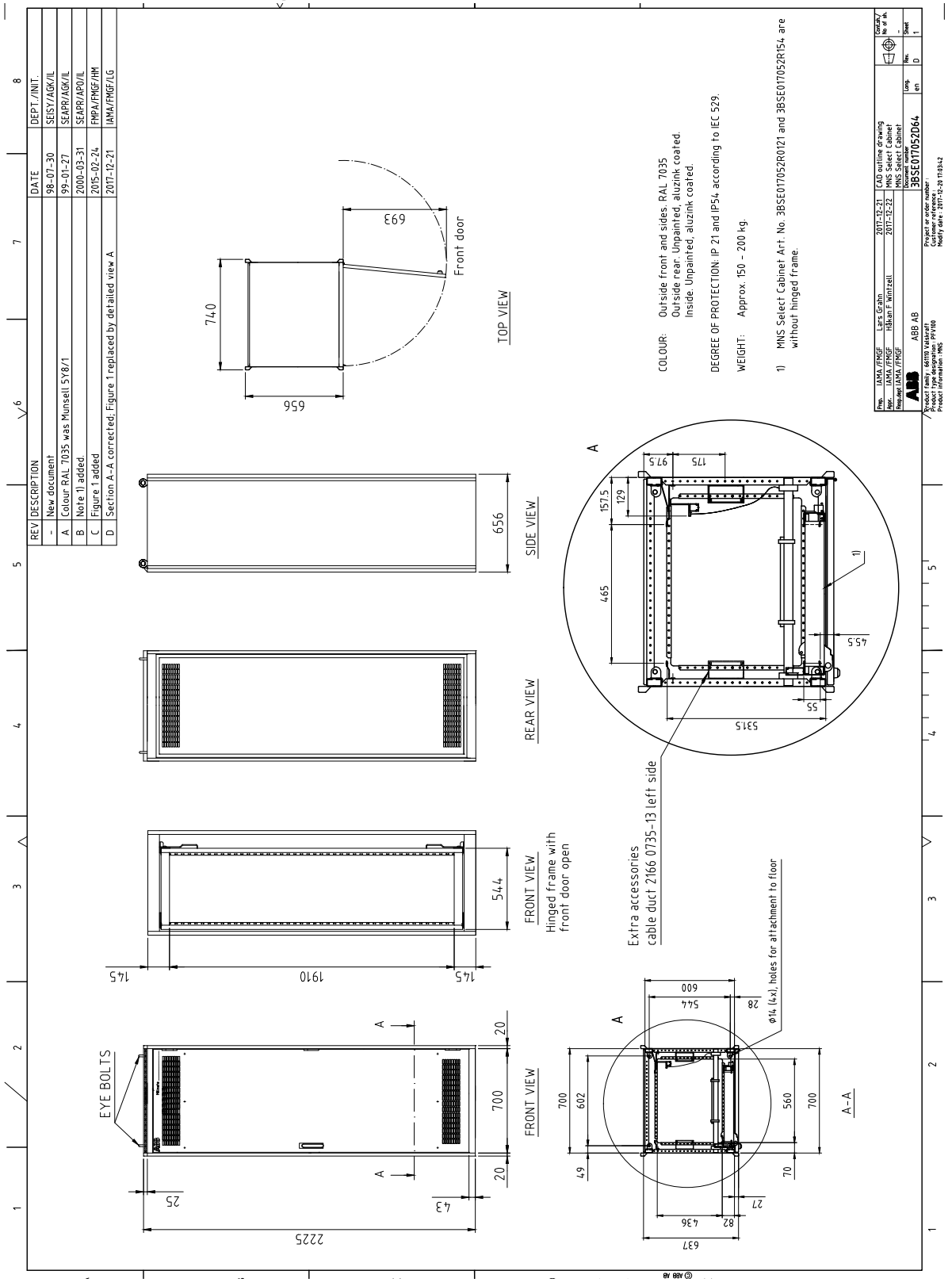

A.6.2 Dimension Drawing 3BSE029997D0064, Rev. A

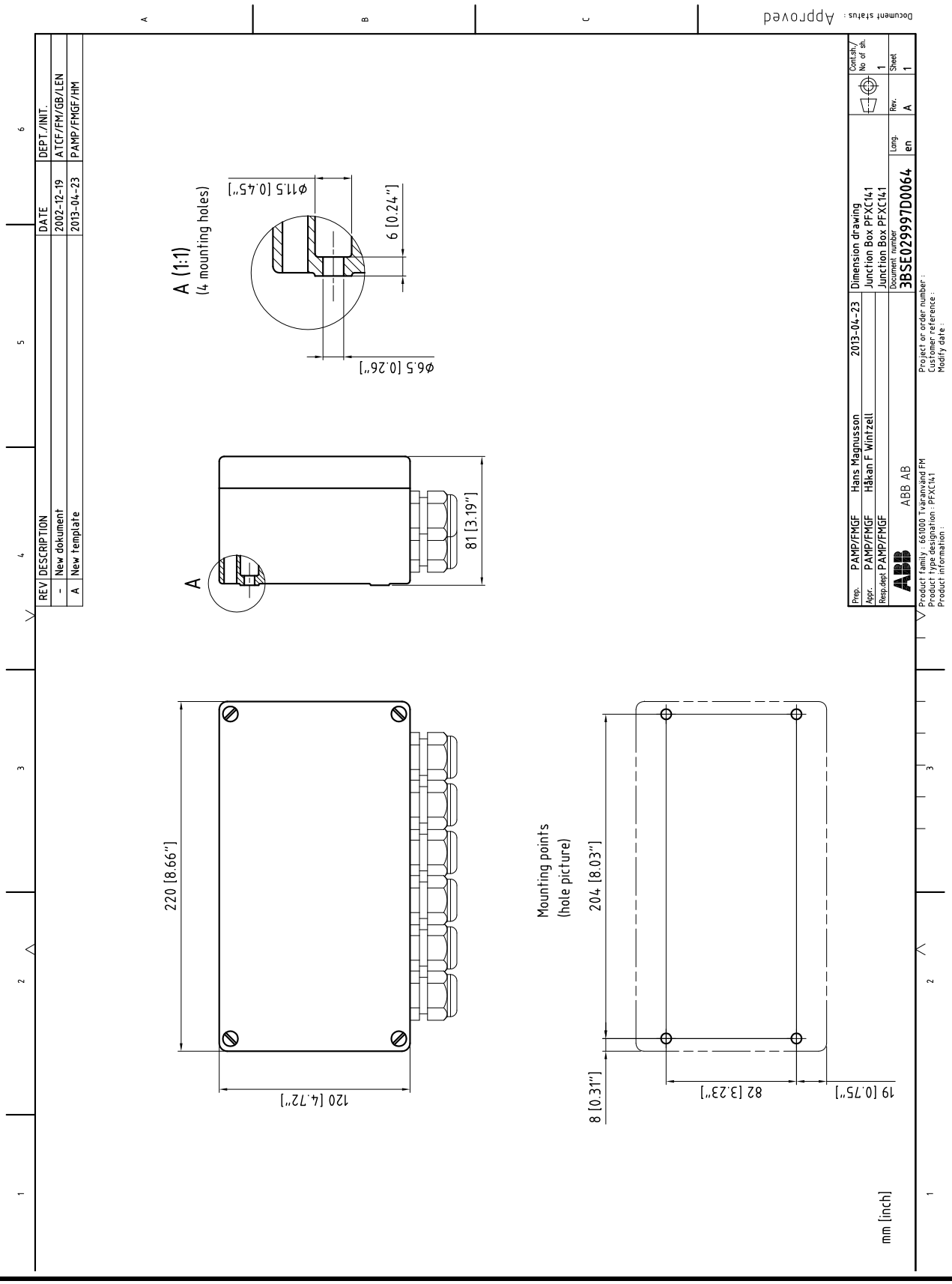

A.7 PROFIBUS DP - GSD File for PFEA112

```
;====================== GSD file:ABB_0716.GSD ======================
;
; DEVICE NAME:          Tension Electronics PFEA112
; AUTHOR:               M.Sollander
; REVISION DATE:        January 27, 2003
;
;===================================================================

#Profibus_DP

GSD_Revision            = 2

;====================== PRODUCT SPECIFICATION ======================

Vendor_Name             = "ABB Automation Techn. Products"
Model_Name              = "Tension Electronics PFEA112"
Ident_Number            = 0x0716
Revision                = "2.0"
Hardware_Release        = "1.0"
Software_Release        = "1.0"

;====================== OVERALL PROFIBUS SPECIFICATIONS ===========

FMS_supp                = 0
Protocol_Ident          = 0
Station_Type            = 0
Slave_Family            = 0

;====================== HARDWARE CONFIGURATION ====================

Implementation_type     = "SPC3"
Redundancy              = 0
Repeater_Ctrl_Sig       = 0
24V_Pins                = 0
```

```
;======================= PROTOCOL CONFIGURATION ====================

Set_Slave_Add_supp      = 0
Auto_Baud_supp          = 1
Min_Slave_Intervall     = 1
Freeze_Mode_supp        = 1
Sync_Mode_supp          = 1
Fail_Safe               = 0

;======================= SUPPORTED BAUDRATES =======================

9.6_supp                = 1
19.2_supp               = 1
45.45_supp              = 1
93.75_supp              = 1
187.5_supp              = 1
500_supp                = 1
1.5M_supp               = 1
3M_supp                 = 1
6M_supp                 = 1
12M_supp                = 1

MaxTsdr_9.6             = 60
MaxTsdr_19.2            = 60
MaxTsdr_45.45           = 60
MaxTsdr_93.75           = 60
MaxTsdr_187.5           = 60
MaxTsdr_500             = 100
MaxTsdr_1.5M            = 150
MaxTsdr_3M              = 250
MaxTsdr_6M              = 450
MaxTsdr_12M             = 800
```

```
;====================== DIAGNOSTIC DEFINITIONS ====================

Max_Diag_Data_Len       = 6

;====================== PARAMETER DEFINITIONS ======================

User_Prm_Data_Len       = 3
User_Prm_Data           = 0, 0, 0

;====================== MODULE DEFINITIONS =========================

Modular_Station         = 0

Module                  = "PFEA112" 0x51,0x11,0x21
EndModule

;===================================================================
```

A.8 PROFINET - GSDML File for PFEA122

```
<?xml version="1.0" encoding="iso-8859-1"?>
<ISO15745Profile
xmlns="http://www.profibus.com/GSDML/2003/11/DeviceProfile"
xmlns:xsi="http://www.w3.org/2001/XMLSchema-instance"
xsi:schemaLocation="http://www.profibus.com/GSDML/2003/11/Devic
eProfile ..\xsd\GSDML-DeviceProfile-V2.42.xsd">
<!--
* Copyright ABB AB, 2023. All rights reserved.
*
* Tension Electronics PFEA122 Release 3.0. See links below.
* https://new.abb.com/products/measurement-products/strip-
tension
* https://new.abb.com/products/measurement-products/web-tension
*
* HISTORY:
*  Revision: 1   Date: 2023-03-30 Description: Initial version
-->
  <ProfileHeader>
    <ProfileIdentification>PROFINET Device
Profile</ProfileIdentification>
    <ProfileRevision>1.00</ProfileRevision>
    <ProfileName>Device Profile for PROFINET
Devices</ProfileName>
    <ProfileSource>PROFIBUS Nutzerorganisation e. V.
(PNO)</ProfileSource>
    <ProfileClassID>Device</ProfileClassID>
    <ISO15745Reference>
      <ISO15745Part>4</ISO15745Part>
      <ISO15745Edition>1</ISO15745Edition>
      <ProfileTechnology>GSDML</ProfileTechnology>
    </ISO15745Reference>
  </ProfileHeader>
  <ProfileBody>
    <DeviceIdentity VendorID="0x064A" DeviceID="0x0716">
      <InfoText TextId="IDT_DeviceSaleName"/>
```

```
      <VendorName Value="ABB AB"/>
    </DeviceIdentity>
    <DeviceFunction>
      <Family MainFamily="Sensors" ProductFamily="ABB Tension
Electronics"/>
    </DeviceFunction>
    <ApplicationProcess>


<!--
================================================================
================================================================
================ -->
<!--            DEVICE ACCESS POINT
-->
<!--
================================================================
================================================================
================ -->
      <DeviceAccessPointList>
            <!--MinDeviceInterval is a multiple of 31.25us -->
        <DeviceAccessPointItem ID="DIM 1"
MultipleWriteSupported="true"
NameOfStationNotTransferable="true" PhysicalSlots="0..2"
ModuleIdentNumber="0x10100000" MinDeviceInterval="32"
ImplementationType="Intel" DNS_CompatibleName="pfea122"
FixedInSlots="0" ObjectUUID_LocalIndex="1"
IO_SupervisorSupported="false" DeviceAccessSupported="true"
NumberOfDeviceAccessAR="1" CheckDeviceID_Allowed="false"
PNIO_Version="V2.42" ResetToFactoryModes="2"
LLDP_NoD_Supported="true">
          <ModuleInfo>
            <Name TextId="IDT_DAP1ModuleInfoName"/>
            <InfoText TextId="IDT_DAP1ModuleInfoText"/>
            <VendorName Value="ABB AB"/>
            <OrderNumber Value="3BSE096217"/>
          </ModuleInfo>
          <CertificationInfo ConformanceClass="B"
ApplicationClass="" NetloadClass="II"/>
          <IOConfigData MaxInputLength="32"
MaxOutputLength="32"/>
          <UseableModules>
```

```
            <ModuleItemRef ModuleItemTarget="INDATA_MODULE"
FixedInSlots="1"/>
            <ModuleItemRef ModuleItemTarget="OUTDATA_MODULE"
FixedInSlots="2"/>
          </UseableModules>
          <VirtualSubmoduleList>
            <VirtualSubmoduleItem ID="VSMI 1"
SubmoduleIdentNumber="0x10110000" MayIssueProcessAlarm="true">
              <IOData/>
              <ModuleInfo>
                <Name TextId="IDT_VSMI1_Name"/>
                <InfoText TextId="IDT_VSMI1_Info"/>
              </ModuleInfo>
            </VirtualSubmoduleItem>
          </VirtualSubmoduleList>
          <SystemDefinedSubmoduleList>
            <InterfaceSubmoduleItem ID="ISMI00000001"
SupportedProtocols="LLDP;SNMP" DCP_HelloSupported="false"
NetworkComponentDiagnosisSupported="false"
SubslotNumber="32768" TextId="TOK_Subslot_8000"
SubmoduleIdentNumber="0x10110001"
SupportedRT_Classes="RT_CLASS_1" PTP_BoundarySupported="true"
DCP_BoundarySupported="true" Writeable_IM_Records="1 2 3"
IM5_Supported="false">
              <ApplicationRelations NumberOfAR="1"
NumberOfAdditionalInputCR="0"
NumberOfAdditionalMulticastProviderCR="0"
NumberOfAdditionalOutputCR="0" NumberOfMulticastConsumerCR="0"
StartupMode="Advanced;Legacy">
                <TimingProperties SendClock="32"
ReductionRatio="1 2 4 8 16 32 64 128 256 512"/>
              </ApplicationRelations>
              <MediaRedundancy SupportedRole="Client"
MRPD_Supported="false" MRT_Supported="false"
AdditionalProtocolsSupported="false"/>
            </InterfaceSubmoduleItem>
          <PortSubmoduleItem ID="IDS_1P1" SubslotNumber="32769"
MAUTypes="16" TextId="TOK_Port1"
SubmoduleIdentNumber="0x10110002" CheckMAUTypeSupported="true"
LinkStateDiagnosisCapability="Up+Down"
```

```
PortDeactivationSupported="false"
SupportsRingportConfig="false" IsDefaultRingport="true">
            <MAUTypeList>
              <MAUTypeItem Value="16" AdjustSupported="true"/>
            </MAUTypeList>
          </PortSubmoduleItem>
          <PortSubmoduleItem ID="IDS_1P2" SubslotNumber="32770"
MAUTypes="16" TextId="TOK_Port2"
SubmoduleIdentNumber="0x10110003" CheckMAUTypeSupported="true"
LinkStateDiagnosisCapability="Up+Down"
PortDeactivationSupported="false"
SupportsRingportConfig="false" IsDefaultRingport="true">
            <MAUTypeList>
              <MAUTypeItem Value="16" AdjustSupported="true"/>
            </MAUTypeList>
          </PortSubmoduleItem>
        </SystemDefinedSubmoduleList>
      </DeviceAccessPointItem>
    </DeviceAccessPointList>


<!--
================================================================
================================================================
================ -->
<!--            MODULE LIST
-->
<!--
================================================================
================================================================
================ -->
    <ModuleList>


      <ModuleItem ID="INDATA_MODULE"
ModuleIdentNumber="0x10200000">
        <ModuleInfo>
          <Name TextId="IDT_InModuleInfoName"/>
          <InfoText TextId="IDT_InModuleInfoText"/>
        </ModuleInfo>
        <VirtualSubmoduleList>
```

```
            <VirtualSubmoduleItem ID="SM_IN1"
SubmoduleIdentNumber="0x10220001" MayIssueProcessAlarm="false"
FixedInSubslots="1">
              <IOData>
                <Input>
                  <DataItem DataType="Integer32"
TextId="IDT_SM1IN"/>
                </Input>
              </IOData>
              <ModuleInfo>
                <Name TextId="IDT_InTensionModule1InfoName"/>
               <InfoText TextId="IDT_InTensionModule1InfoText"/>
              </ModuleInfo>
            </VirtualSubmoduleItem>

            <VirtualSubmoduleItem ID="SM_IN2"
SubmoduleIdentNumber="0x10220002" MayIssueProcessAlarm="false"
FixedInSubslots="2">
              <IOData>
                <Input>
                  <DataItem DataType="Integer32"
TextId="IDT_SM2IN"/>
                </Input>
              </IOData>
              <ModuleInfo>
                <Name TextId="IDT_InTensionModule2InfoName"/>
               <InfoText TextId="IDT_InTensionModule2InfoText"/>
              </ModuleInfo>
            </VirtualSubmoduleItem>

            <VirtualSubmoduleItem ID="SM_IN3"
SubmoduleIdentNumber="0x10220003" MayIssueProcessAlarm="false"
FixedInSubslots="3">
              <IOData>
                <Input>
                  <DataItem DataType="Integer32"
TextId="IDT_SM3IN"/>
```

```
                </Input>
              </IOData>
              <ModuleInfo>
                <Name TextId="IDT_InTensionModule3InfoName"/>
               <InfoText TextId="IDT_InTensionModule3InfoText"/>
              </ModuleInfo>
            </VirtualSubmoduleItem>

            <VirtualSubmoduleItem ID="SM_IN4"
SubmoduleIdentNumber="0x10220004" MayIssueProcessAlarm="false"
FixedInSubslots="4">
              <IOData>
                <Input>
                    <DataItem DataType="Unsigned8"
UseAsBits="true" TextId="IDT_SM4IN">
                      <BitDataItem BitOffset="0"
TextId="IDT_SM4_IN_Bit0_Name"/>
                      <BitDataItem BitOffset="1"
TextId="IDT_SM4_IN_Bit1_Name"/>
                      <BitDataItem BitOffset="2"
TextId="IDT_SM4_IN_Bit2_Name"/>
                      <BitDataItem BitOffset="3"
TextId="IDT_SM4_IN_Bit3_Name"/>
                      <BitDataItem BitOffset="4"
TextId="IDT_SM4_IN_Bit4_Name"/>
                      <BitDataItem BitOffset="5"
TextId="IDT_SM4_IN_Bit5_Name"/>
                      <BitDataItem BitOffset="6"
TextId="IDT_SM4_IN_Bit6_Name"/>
                      <BitDataItem BitOffset="7"
TextId="IDT_SM4_IN_Bit7_Name"/>
                    </DataItem>
                </Input>
              </IOData>
              <ModuleInfo>
                <Name TextId="IDT_InTensionModule4InfoName"/>
               <InfoText TextId="IDT_InTensionModule4InfoText"/>
              </ModuleInfo>
```

```
            </VirtualSubmoduleItem>

            <VirtualSubmoduleItem ID="SM_IN5"
SubmoduleIdentNumber="0x10220005" MayIssueProcessAlarm="false"
FixedInSubslots="5">
              <IOData>
                <Input>
                  <DataItem DataType="Unsigned8"
TextId="IDT_SM5IN"/>
                </Input>
              </IOData>
              <ModuleInfo>
                <Name TextId="IDT_InTensionModule5InfoName"/>
               <InfoText TextId="IDT_InTensionModule5InfoText"/>
              </ModuleInfo>
            </VirtualSubmoduleItem>

          </VirtualSubmoduleList>
        </ModuleItem>

        <ModuleItem ID="OUTDATA_MODULE"
ModuleIdentNumber="0x10300000">
          <ModuleInfo>
            <Name TextId="IDT_OutModuleName"/>
            <InfoText TextId="IDT_OutModuleInfo"/>
          </ModuleInfo>
          <VirtualSubmoduleList>
            <VirtualSubmoduleItem ID="SM1_OUT"
SubmoduleIdentNumber="0x10330001" MayIssueProcessAlarm="false"
FixedInSubslots="1">
              <IOData>
                <Output>
                <DataItem DataType="Unsigned8" UseAsBits="true"
TextId="IDT_SM1OUT">
                    <BitDataItem BitOffset="0"
TextId="IDT_SM1_OUT_Bit0_Name"/>
                    <BitDataItem BitOffset="1"
TextId="IDT_SM1_OUT_Bit1_Name"/>
```

```
                    <BitDataItem BitOffset="2"
TextId="IDT_SM1_OUT_Bit2_Name"/>
                    <BitDataItem BitOffset="3"
TextId="IDT_SM1_OUT_Bit3_Name"/>
                    <BitDataItem BitOffset="4"
TextId="IDT_SM1_OUT_Bit4_Name"/>
                    <BitDataItem BitOffset="5"
TextId="IDT_SM1_OUT_Bit5_Name"/>
                    <BitDataItem BitOffset="6"
TextId="IDT_SM1_OUT_Bit6_Name"/>
                    <BitDataItem BitOffset="7"
TextId="IDT_SM1_OUT_Bit7_Name"/>

</DataItem>
                </Output>
              </IOData>
              <ModuleInfo>
                <Name TextId="TID_Commands"/>
                <InfoText TextId="TID_CommandsInfo"/>
              </ModuleInfo>
            </VirtualSubmoduleItem>
          </VirtualSubmoduleList>
        </ModuleItem>


    </ModuleList>


<!--
================================================================
================================================================
================ -->
<!--              TEXT STRINGS
-->
<!--
================================================================
================================================================
================ -->
      <ExternalTextList>
        <PrimaryLanguage>
```

```
                        <Text TextId="IDT_DeviceSaleName"
Value="Tension Electronics PFEA122"/>
                        <Text TextId="IDT_DAP1ModuleInfoName"
Value="Tension Electronics PFEA122"/>
                        <Text TextId="IDT_DAP1ModuleInfoText"
Value="Tension Electronics PFEA122 with PROFINET"/>
                        <Text TextId="IDT_InModuleInfoName"
Value="Input data"/>
                        <Text TextId="IDT_InModuleInfoText"
Value="Measurements"/>
                        <Text TextId="IDT_OutModuleName"
Value="Output data"/>
                        <Text TextId="IDT_OutModuleInfo"
Value="Commands"/>
                        <Text TextId="IDT_VSMI1_Name"
Value="PFEA122 Device"/>
                        <Text TextId="IDT_VSMI1_Info"
Value="PFEA122 Device Info"/>


                        <Text
TextId="IDT_InTensionModule1InfoName" Value="WebTensionA+B"/>
                        <Text
TextId="IDT_InTensionModule1InfoText" Value="Web Tension A+B"/>


                        <Text
TextId="IDT_InTensionModule2InfoName" Value="WebTensionA"/>
                        <Text
TextId="IDT_InTensionModule2InfoText" Value="Web Tension A"/>


                        <Text
TextId="IDT_InTensionModule3InfoName" Value="WebTensionB"/>
                        <Text
TextId="IDT_InTensionModule3InfoText" Value="Web Tension B"/>


          <Text TextId="IDT_InTensionModule4InfoName"
Value="Status"/>
          <Text TextId="IDT_InTensionModule4InfoText"
Value="Status"/>
```

```
          <Text TextId="IDT_InTensionModule5InfoName"
Value="Spare"/>
          <Text TextId="IDT_InTensionModule5InfoText"
Value="Spare"/>

          <Text TextId="IDT_SM1OUT" Value="Commands"/>
          <Text TextId="IDT_SM1_OUT_Bit0_Name" Value="ZeroSet"/>
          <Text TextId="IDT_SM1_OUT_Bit1_Name" Value="Not Used
1"/>
          <Text TextId="IDT_SM1_OUT_Bit2_Name" Value="Not Used
2"/>
          <Text TextId="IDT_SM1_OUT_Bit3_Name" Value="Not Used
3"/>
          <Text TextId="IDT_SM1_OUT_Bit4_Name" Value="Not Used
4"/>
          <Text TextId="IDT_SM1_OUT_Bit5_Name" Value="Not Used
5"/>
          <Text TextId="IDT_SM1_OUT_Bit6_Name" Value="Not Used
6"/>
          <Text TextId="IDT_SM1_OUT_Bit7_Name" Value="Not Used
7"/>

          <Text TextId="IDT_SM1IN" Value="WebTensionA+B"/>
          <Text TextId="IDT_SM2IN" Value="WebTensionA"/>
          <Text TextId="IDT_SM3IN" Value="WebTensionB"/>

          <Text TextId="IDT_SM4IN" Value="Status"/>
          <Text TextId="IDT_SM4_IN_Bit0_Name" Value="Flash
Error"/>
          <Text TextId="IDT_SM4_IN_Bit1_Name" Value="EEPROM
Error"/>
          <Text TextId="IDT_SM4_IN_Bit2_Name" Value="Supply
Error"/>
          <Text TextId="IDT_SM4_IN_Bit3_Name" Value="Excitation
Error"/>
          <Text TextId="IDT_SM4_IN_Bit4_Name"
Value="Synchronization Problem"/>
          <Text TextId="IDT_SM4_IN_Bit5_Name" Value="Not Used
5"/>
```

```
            <Text TextId="IDT_SM4_IN_Bit6_Name" Value="Not Used
6"/>
            <Text TextId="IDT_SM4_IN_Bit7_Name" Value="Not Used
7"/>

            <Text TextId="IDT_SM5IN" Value="Spare"/>

            <Text TextId="TID_Commands" Value="Commands"/>
            <Text TextId="TID_CommandsInfo" Value="Commands that
can be sent to PFEA122"/>

            <Text TextId="TOK_Subslot_8000" Value="X1"/>
            <Text TextId="TOK_Port1" Value="Port 1"/>
            <Text TextId="TOK_Port2" Value="Port 2"/>

          </PrimaryLanguage>
        </ExternalTextList>
      </ApplicationProcess>
    </ProfileBody>
</ISO15745Profile>
```

Appendix B PFCL 301E - Designing the Load Cell Installation

B.1 About This Appendix

This appendix describes the procedure for designing the load cell installation.

The following sections are included:

- Basic application considerations
- Designing the load cell installation (step-by-step guide)
- Installation requirements
- Force and wrap gain calculation
  - Horizontal mounting
  - Inclined mounting
  - Single side measurement
- Mounting the load cells
- Technical data
- Drawings
  - Cable diagram(s)
  - Mounting instruction for load cell extension cable
  - Dimension drawing
  - Assembly drawing

B.2 Basic Application Considerations

Each application has its own individual demands that have to be considered; though a few basic considerations tend to repeat themselves.

- What type of process is involved (papermaking, converting, etc.)?
  Is the environment demanding (temperature, chemicals, etc.)?
- What is the tension measurement purpose; indication or closed loop control?
  Are there any specific accuracy demands involved?
- What is the machine design like? Is there the possibility to modify the design, in order to fit the most suitable load cell, or is the machine design fixed?
- What are the forces acting on the roll like (size and direction)?
  Can they be altered by redesign?

If these questions are dealt with thoroughly, the installation is very likely to be successful. However, the extent to which measurement accuracy is needed, defines the requirements when designing a load cell installation.

B.3 Step-by-Step Guide for Designing the Load Cell Installation

The procedure below defines the main considerations involved in designing a load cell installation.

1. Check load cell data so that environmental demands are met.
2. Calculate forces; vertical, horizontal and axial (cross directional).
3. Size and orient load cell so that the guidelines below are met:
   a. Try to achieve a measured value no less than 10% of web tension, in the load cell measurement direction!
   b. Select load cell size so that it is loaded as close as possible to its nominal load! Do not dimension Force component of Tension in measuring direction, F_R, for less than 10% of the load cell nominal load!
   c. If the span between maximum and minimum tension in the process is large, select load cell so that the maximum tension will be in the load cell extended range (when applicable)!
   d. The measured force component of web tension is recommended to be at least 30% of tare force component (roll weight) acting in load cell measurement direction. The reason for this recommendation is load cell signal stability, especially when the system operates in a large temperature span.
   This means that if F_{RT} < 1/3 of F_{nom}, F_R should be at least 10% of F_{nom}.
   For larger F_{RT}, lowest F_R is recommended to be at least 30% of F_{RT}.

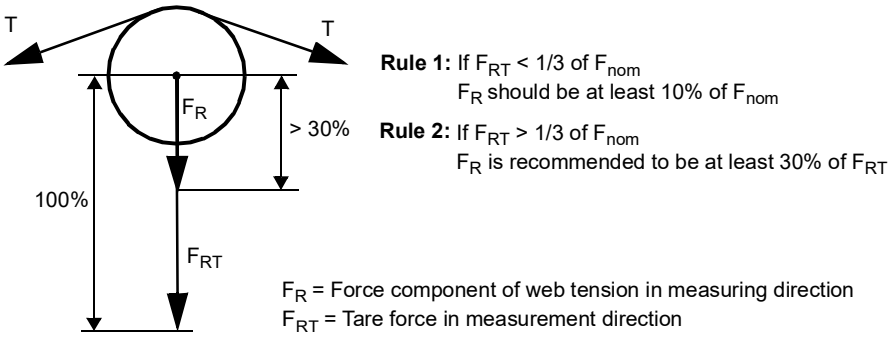

   e. Check load cell data so that limits for building height, transverse and axial forces are not exceeded.
4. Design base frame and/or adapter plates.

B.4 Installation Requirements

To achieve the specified accuracy, the best possible reliability and long-term stability, install the load cells in accordance with the requirements below.

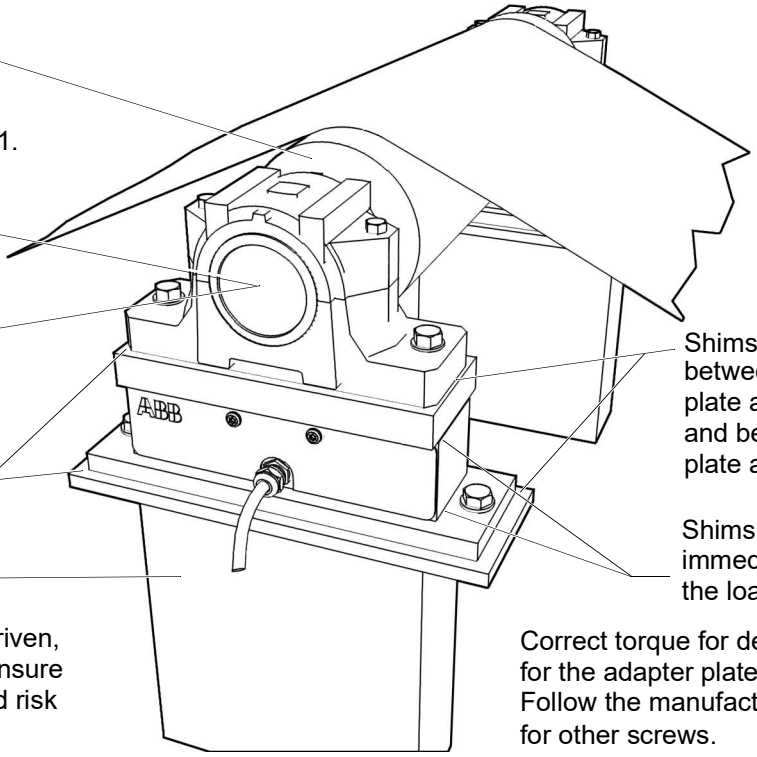

Alignment of the load cells

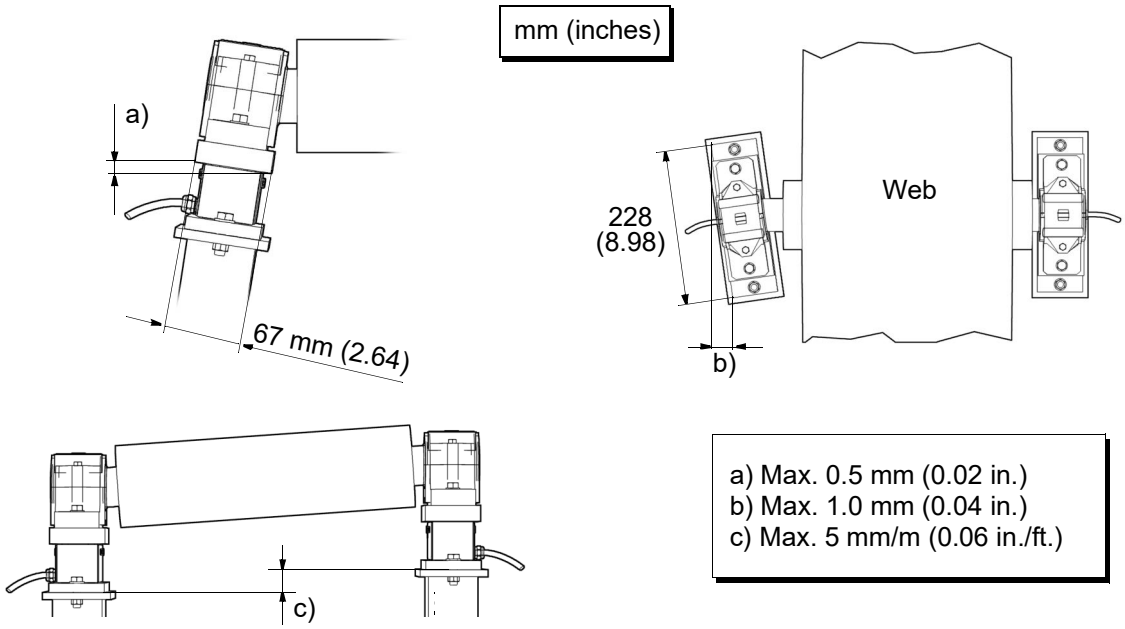

Figure B-1. Installation Requirements

B.5 Mounting Alternatives, Calculating Force and Calculating Wrap Gain

B.5.1 Horizontal Mounting

PFCL 301E

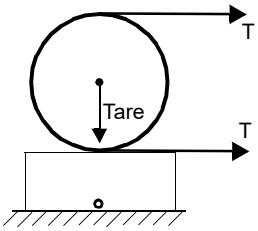

No vertical web tension force applied to the load cell.

In most cases, horizontal mounting is the most obvious and simplest solution. The load cell should thus be mounted horizontally when possible.

However, should the machine design require inclined mounting of the load cell or should the web path not give a sufficient vertical force, see figure, the inclined mounting is permitted and the calculations are somewhat more complex, (see Appendix B.5.2).

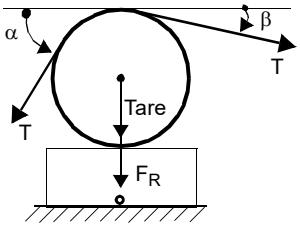

$F_R = T \times (\sin\alpha + \sin\beta)$

$F_{RT} = \text{Tare}$

$F_{Rtot} = F_R + F_{RT} = T \times (\sin\alpha + \sin\beta) + \text{Tare}$

$$T\ (\text{Tension}) = \text{Wrap gain} \times F_R$$

$$\text{Wrap gain} = \frac{T}{F_R} = \frac{T}{T(\sin\alpha + \sin\beta)}$$

$$\text{Wrap gain} = \frac{1}{\sin\alpha + \sin\beta}$$

The PFCL 301E load cell measures the vertical forces applied to its top surface. The horizontal applied forces are not measured and do not influence the vertical measurement. There are two sources of vertical forces; the forces from the web tension and the tare weight of the roll.

Divide the total vertical force F_{Rtot} by two to get the required capacity of each load cell.

Do not oversize an ABB load cell for overload purposes as the load cell has sufficient overload capacity.

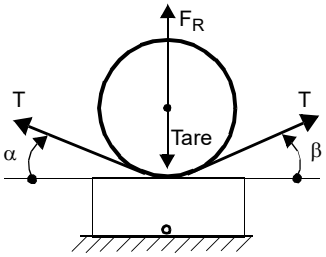

$F_R = T \times (\sin\alpha + \sin\beta)$

$F_{RT} = \text{Tare}$

$F_{Rtot} = F_{RT} - F_R = \text{Tare} - T \times (\sin\alpha + \sin\beta)$

$$T\ (\text{Tension}) = \text{Wrap gain} \times F_R$$

$$\text{Wrap gain} = \frac{T}{F_R} = \frac{T}{T(\sin\alpha + \sin\beta)}$$

$$\text{Wrap gain} = \frac{1}{\sin\alpha + \sin\beta}$$

A PFCL 301E load cell can measure tension as well as compression.

If the T (sin α + sin β) is larger than the tare weight, the load cell will be in tension.

To get the capacity of each load cell:

1. Divide (F_R - Tare) by two
   if F_R is greater than or equal to (Tare × two).
2. Divide Tare by two
   if F_R is smaller than (Tare × two).

B.5.2 Inclined Mounting

PFCL 301E

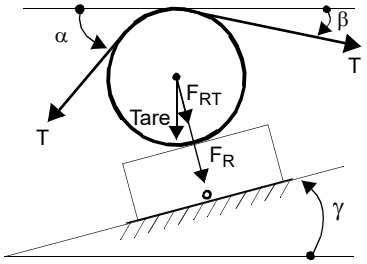

$F_R = T \times [\sin(\alpha - \gamma) + \sin(\beta + \gamma)]$

$F_{RT} = \text{Tare} \times \cos\gamma$

$F_{Rtot} = F_R + F_{RT} =$

$T \times [\sin(\alpha - \gamma) + \sin(\beta + \gamma)] + \text{Tare} \times \cos\gamma$

$T\ (\text{Tension}) = \text{Wrap gain} \times F_R$

$$\text{Wrap gain} = \frac{T}{F_R} = \frac{T}{T[\sin(\alpha - \gamma) + \sin(\beta + \gamma)]}$$

$$\text{Wrap gain} = \frac{1}{\sin(\alpha - \gamma) + \sin(\beta + \gamma)}$$

Sometimes it is necessary to mount the load cell on an incline due to mechanical design constraints of the machine or the need to have a proper force component applied to the load cell.

In this case, the incline angle modifies the tare load and the force components as shown.

B.6 Force Calculation for Measurement with a Single Load Cell

In some cases, it is sufficient to measure the tension with only a single load cell mounted at one end of the roll. The roll should nevertheless be supported at both ends.

B.6.1 The Most Common and Simple Solution

The most obvious and simple solution is horizontal mounting with the web evenly distributed and centered on the roll.

As long as the roll is supported at both ends, the same calculations given in Section B.5, Mounting Alternatives, Calculating Force and Calculating Wrap Gain are valid.

NOTE

The accuracy of a single load cell measurement is highly dependent on how well the center of force can be determined. Since the cross-directional stress distribution generally is somewhat uneven, this is not easily done. The load cell will, however, produce a stable and repeatable measurement.

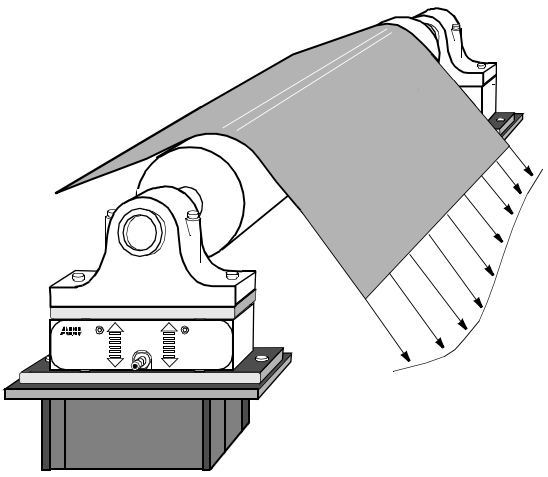

Figure B-2. Cross-directional stress distribution

B.6.2 Force Calculation when the Web is not Centered on the Roll

Use the calculations below for horizontal and inclined mounting when the web is not centered on the roll.

The applied force at the load cell will be proportional to the distance between the tension force center and the load cell centerline.

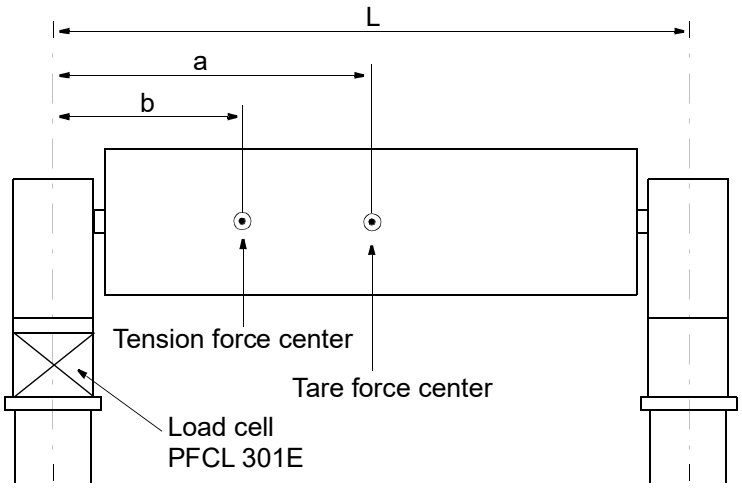

Calculation procedure:

1. Horizontal or inclined mounting?
2. Calculate F_R and F_{RT}, see Section B.5, Mounting Alternatives, Calculating Force and Calculating Wrap Gain
3. Use the following equations:

   F_R for single load cell $= F_R \times \frac{L-b}{L}$

   F_{RT} for single load cell $= F_{RT} \times \frac{L-a}{L}$

   F_{Rtot} for single load cell = F_R for single load cell + F_{RT} for single load cell

   where:

   L = Distance between load cell centerline and the opposite bearing centerline

   a = Distance between tare force center and load cell centerline

   b = Distance between tension force center and load cell centerline

B.7 Mounting the Load Cells

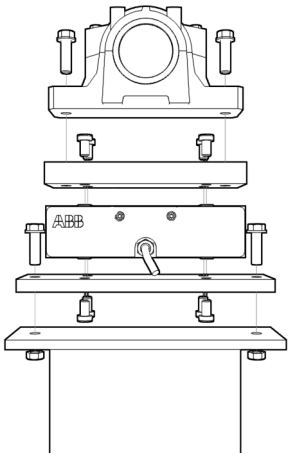

The instructions below apply to a typical mounting arrangement. Variations may be allowed, provided that they comply with the requirements in Appendix B.4.

1. Clean the foundation and other mounting surfaces.
2. Fit the lower adapter plate to the load cell.
   Tighten the screws (included in delivery) with a torque wrench to 24 Nm (18 ft.-lb).
3. Fit the load cell and the lower adapter plate to the foundation,
   but do not fully tighten the screws.
4. Fit the upper adapter plate to the load cell.
   Tighten the screws (included in delivery) with a torque wrench to 24 Nm (18 ft.-lb).
5. Fit the bearing housing and the roll to the upper adapter plate,
   but do not fully tighten the screws.

CAUTION

When mounting bearings or other adjacent details to adapter plates, screws must not protrude into the load cell. The load cell can be damaged by an excessive applied force.

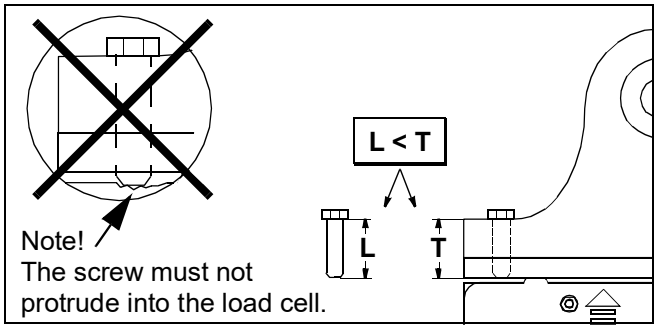

6. Adjust the load cells according to the installation requirements.
   Tighten the foundation screws.
7. Adjust the roll according to the installation requirements.
   Tighten the screws in the upper adapter plate.

B.7.1 Routing the Load Cell Cable

The cable must be supported with clamps and routed to prevent force shunting through the cable.

B.7.2 Connecting the Load Cell Extension Cable

See Section B.10, Mounting Instruction, Cable Connector, 3BSE019064, Rev. A.

B.8 Technical Data

PFCL 301E				Unit
Nominal load				
Nominal load in measuring direction, F_{nom}	0.2 (45)	0.5 (112)	1.0 (225)	kN (lbs)
Permitted transverse load within the accuracy, F_{Vnom} For h = 135 mm (5.3 inch)	0.05 (11)	0.125 (28)	0.25 (56)	
Permitted axial load within the accuracy, F_{Anom} For h = 135 mm (5.3 inch)	0.05 (11)	0.125 (28)	0.25 (56)	
Extended load in measuring direction with accuracy class, compressive force ± 2%, F_{ext}	0.3 (67)	0.75 (169)	1.5 (337)	
Overload capacity				
Max. load in measuring direction without permanent change of data, F_{max} 1)	0.6 (135)	1.5 (337)	3 (674)	kN (lbs)
Max. load in transverse direction without permanent change of data, F_{Vmax} (1). For h = 135 mm (5.3 inch)	0.3 (67)	0.75 (169)	1.5 (337)	
Spring constant	9 (52)	22 (124)	34 (197)	kN/mm (1000 lbs/inch)
Accuracy				
Accuracy class, compressive force	± 1.0			%
Linearity deviation	< ± 0.5			
Repeatability error	< ± 0.1			
Hysteresis	< ± 0.3			
Mechanical data				
Weight without adapter plates	approx. 2.5 (approx. 5.5)			kg (lbs)
Weight including adapter plates	approx. 5.4 (approx. 11.9)			
Length, width and height are given in Section B.11, Dimension Drawing, 3BSE015955D0094, Rev. D.				
Material				
Load cell	SS 2387 stainless steel, DIN X4CrNiMo 165. Corrosion resistance properties similar to AISI 304.			
Adapter plates	SS 1312, finished by black chromating. ASTM A 238-79 Grade C.			

(1) F_{max} and F_{Vmax} are allowed at the same time.

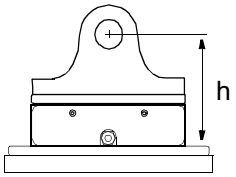

Figure B-3. Building height

Table B-1. Environmental data for load cell PFCL 301E

PFCL 301E		Unit
Compensated temperature range	+20 - +60 (68 - 140)	°C (°F)
Zero point drift	< ± 150 (83)	ppm/K (ppm/°F)
Sensitivity drift	< ± 250 (139)	
Working temperature range	-10 - +80 (14 - 176)	°C (°F)
Zero point drift	< ± 250 (139)	ppm/K (ppm/°F)
Sensitivity drift	< ± 350 (194)	
Storage temperature range	-40 - +90 (-40 - 194)	°C (°F)
Degree of protection	IP 66 acc. to EN 60 529	

Table B-2. Mounting screws

Type of screws	Strength class	Dimension	Tightening torque
Electro-zinc plated steel screws, lubricated with oil or emulsion. Strength class according to ISO 898/1.	8.8	M8	24 Nm (18 ft-lb)

B.9 Cable Diagram 3BSE028140D0065, page 2/5, Rev. D

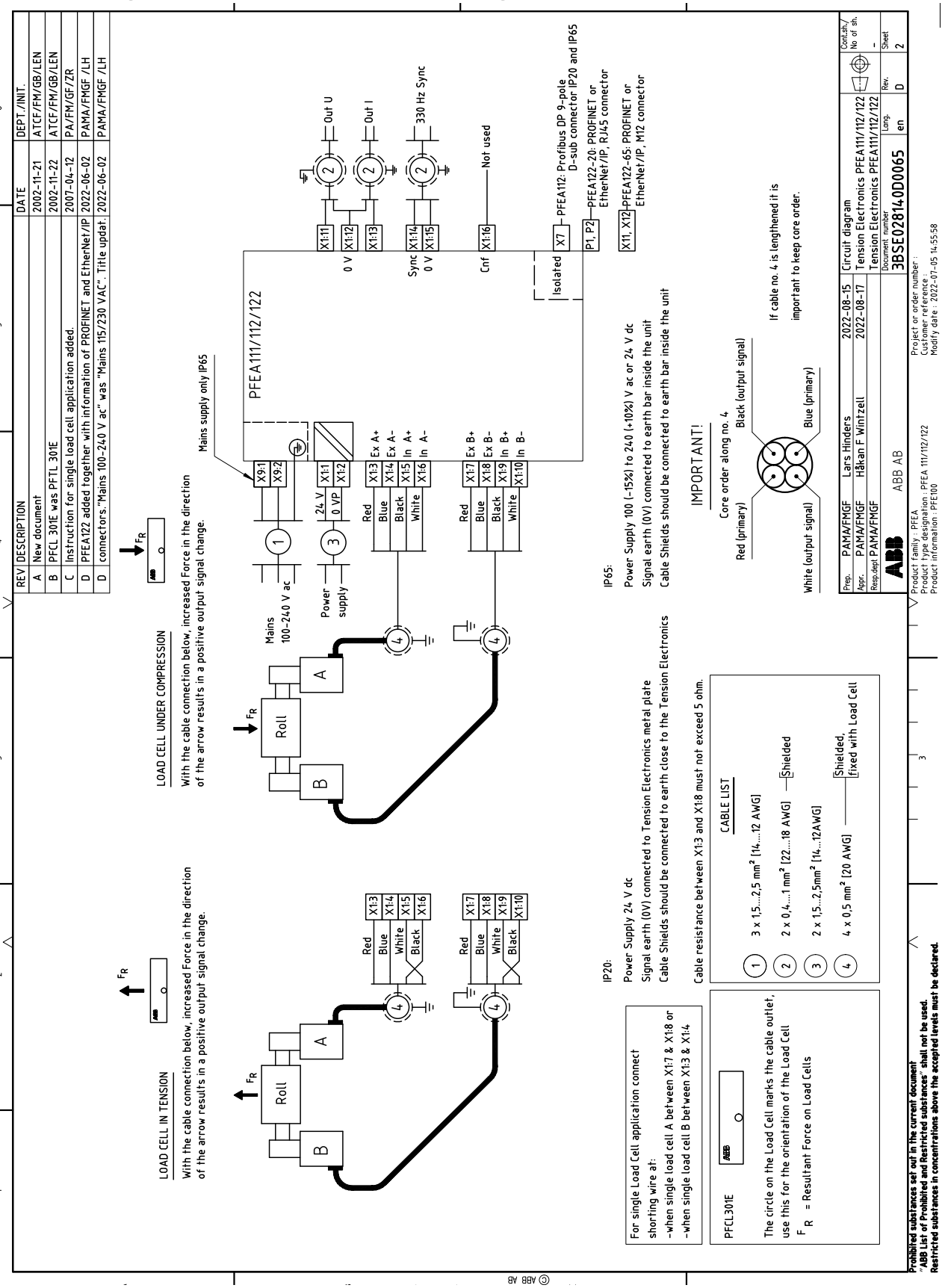

B.10 Mounting Instruction, Cable Connector, 3BSE019064, Rev. A

REV	DESCRIPTION	DATE	DEPT./INIT.
-	New Document	1999.07.07	SEAPR / AGB / JRK
A	Core order along cable added.	00-02-25	SEAPR / AGB / JK

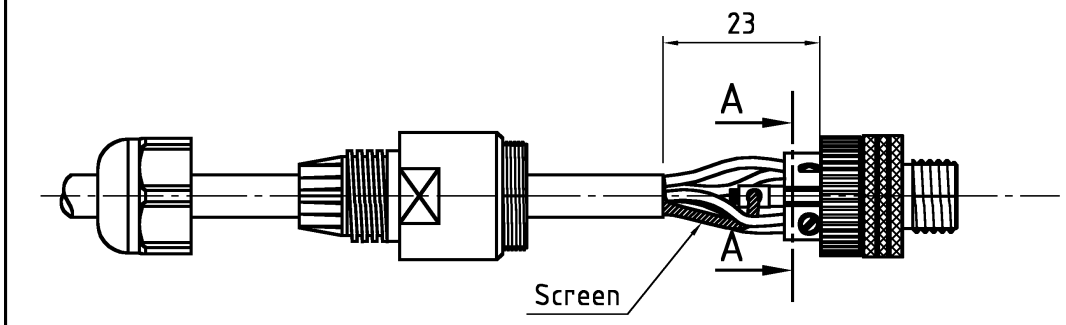

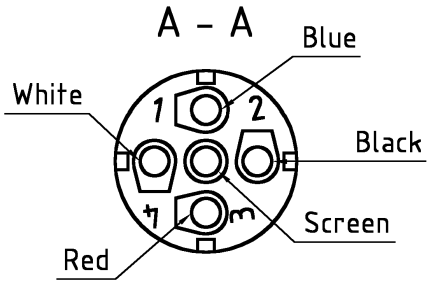

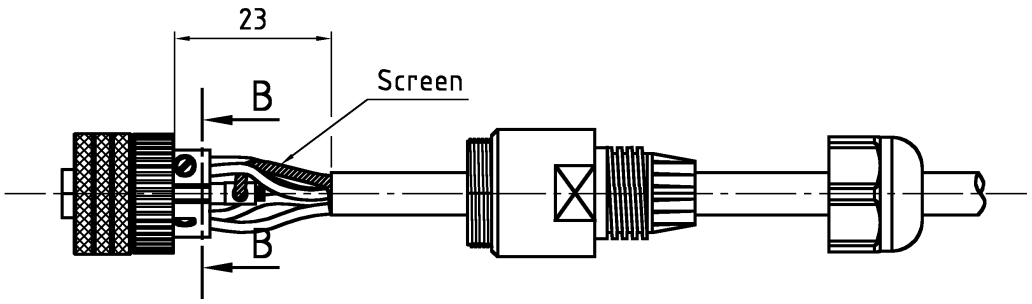

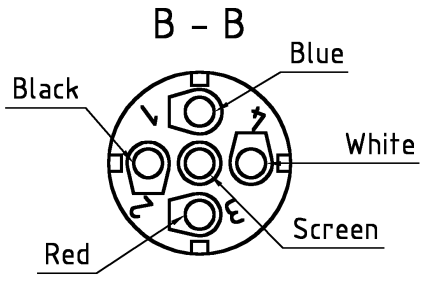

IMPORTANT!

Core order along cable

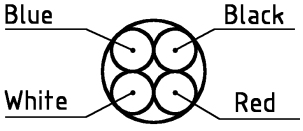

Prep.	SEAPR/AGB	Hugosson Mattias	2000-02-25	INSTRUCTION			Cont.sh./ No of sh.
Appr.	SEAPR/AGB	Carlqvist Ulf	2000-02-29	Mounting instr. for cable connector			
Resp.dept	SEAPR/AGB			Monteringsinstruktion för kontakt			
ABB Automation Products AB				Document number 3BSE019064	Lang. en	Rev. A	Sheet 1

B.11 Dimension Drawing, 3BSE015955D0094, Rev. D

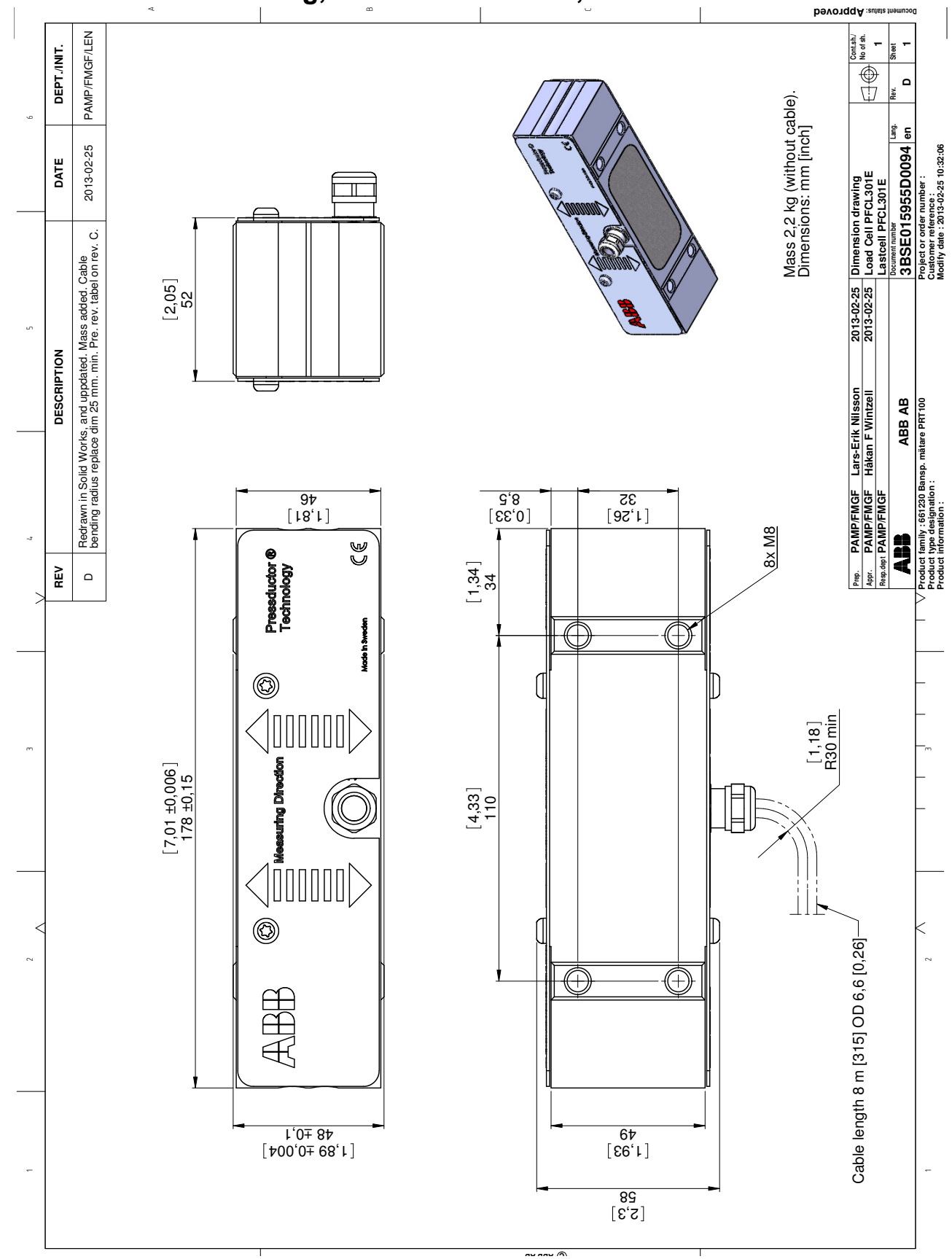

B.12 Assembly Drawing, 3BSE015955D0096, Rev. C

REV	DESCRIPTION	DATE	DEPT./INIT.
-	New document	98-04-23	SEISY/AGM/GD
A	Thickness and width upper adapterplate was 11 respectively 76 mm.	2000-01-24	SEAPR/AGB/MH
B	Dimension 48 added. Toelerancs added to dimension 67, 77 178 and 228	2001-10-19	SEAPR/AGB/LEN
C	Redrawn in Solid Works and uppdated. Cable min bending radius added.	2013-02-25	PAMP/FMGF/LEN

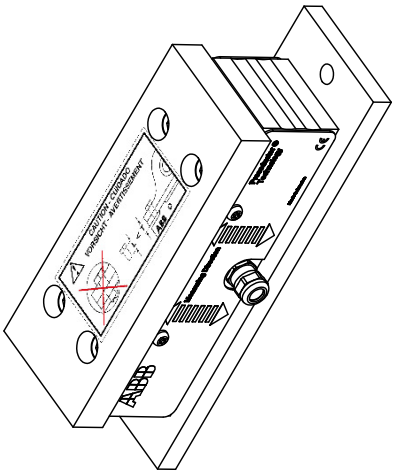

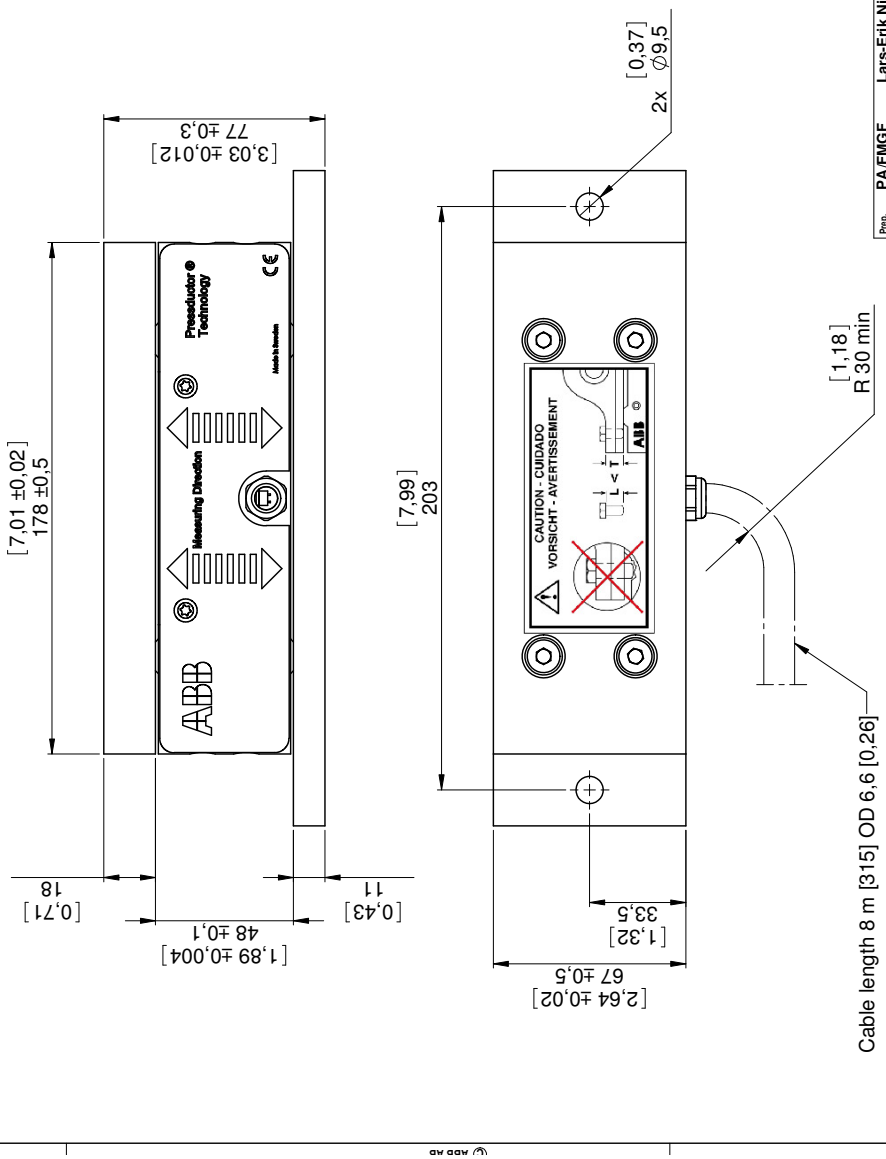

Mass (approx. without cable) : 5 kg.
Dimensions in : mm [inch]

Prep.	PA/FMGF	Lars-Erik Nilsson 2013-02-25
Appr.	PA/FMGF	Håkan F Wintzell 2013-02-25
Resp.dept	PA/FMGF	

ABB AB

Dimension drawing
Assembly PFCL301E
Assembly PFCL301E

Document number: 3BSE015955D0096 | Lang.: en | Rev.: C | Cont.sh./No of sh.: 1 | Sheet: 1

Document status: Approved

Project or order number :
Customer reference :
Modify date : 2013-02-25 10:13:18
Product family : 661230 Bansp. mätare PRT100
Product type designation : PFCL 301E
Product information :

Appendix C PFTL 301E - Designing the Load Cell Installation

C.1 About This Appendix

This appendix describes the procedure for designing the load cell installation.

The following sections are included:

- Basic application considerations
- Designing the load cell installation (step-by-step guide)
- Installation requirements
- Force and wrap gain calculation
  - Horizontal mounting
  - Inclined mounting
  - Single side measurement
- Mounting the load cells
- Technical data
- Drawings
  - Cable diagram(s)
  - Mounting instruction for load cell extension cable
  - Dimension drawing
  - Assembly drawing

C.2 Basic Application Considerations

Each application has its own individual demands that have to be considered; though a few basic considerations tend to repeat themselves.

- What type of process is involved (papermaking, converting, etc.)?
  Is the environment demanding (temperature, chemicals, etc.)?
- What is the tension measurement purpose; indication or closed loop control?
  Are there any specific accuracy demands involved?
- What is the machine design like? Is there the possibility to modify the design, in order to fit the most suitable load cell, or is the machine design fixed?
- What are the forces acting on the roll like (size and direction)?
  Can they be altered by redesign?

If these questions are dealt with thoroughly, the installation is very likely to be successful. However, the extent to which measurement accuracy is needed, defines the requirements when designing a load cell installation.

C.3 Step-by-Step Guide for Designing the Load Cell Installation

The procedure below defines the main considerations involved in designing a load cell installation.

1. Check load cell data so that environmental demands are met.
2. Calculate forces; vertical, horizontal and axial (cross directional).
3. Size and orient load cell so that the guidelines below are met:
   a. Try to achieve a measured value no less than 10% of web tension, in the load cell measurement direction!
   b. Select load cell size so that it is loaded as close as possible to its nominal load! Do not dimension Force component of Tension in measuring direction, F_R, for less than 10% of the load cell nominal load!
   c. If the span between maximum and minimum tension in the process is large, select load cell so that the maximum tension will be in the load cell extended range (when applicable)!
   d. The measured force component of web tension is recommended to be at least 30% of tare force component (roll weight) acting in load cell measurement direction. The reason for this recommendation is load cell signal stability, especially when the system operates in a large temperature span.
   This means that if $F_{RT} < 1/3$ of F_{nom}, F_R should be at least 10% of F_{nom}.
   For larger F_{RT}, lowest F_R is recommended to be at least 30% of F_{RT}.

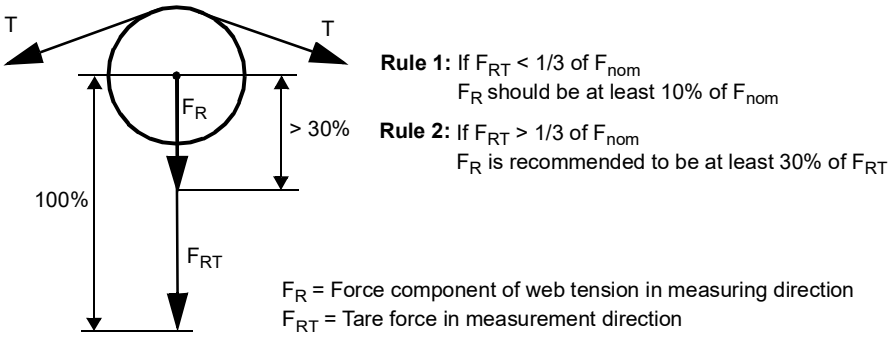

   e. Check load cell data so that limits for building height, transverse and axial forces are not exceeded.
4. Design base frame and/or adapter plates.

C.4 Installation Requirements

To achieve the specified accuracy, the best possible reliability and long-term stability, install the load cells in accordance with the requirements below.

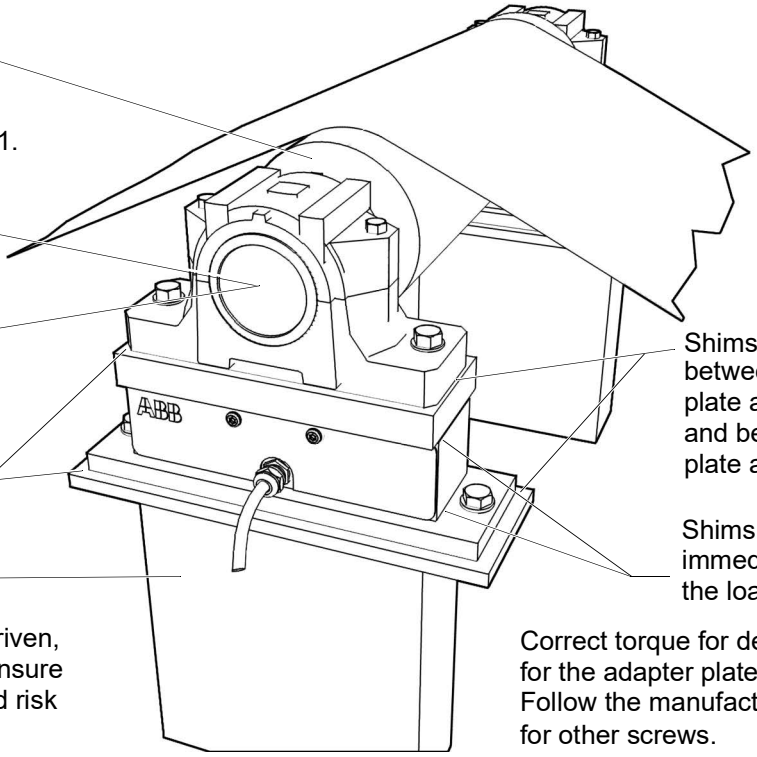

Alignment of the load cells

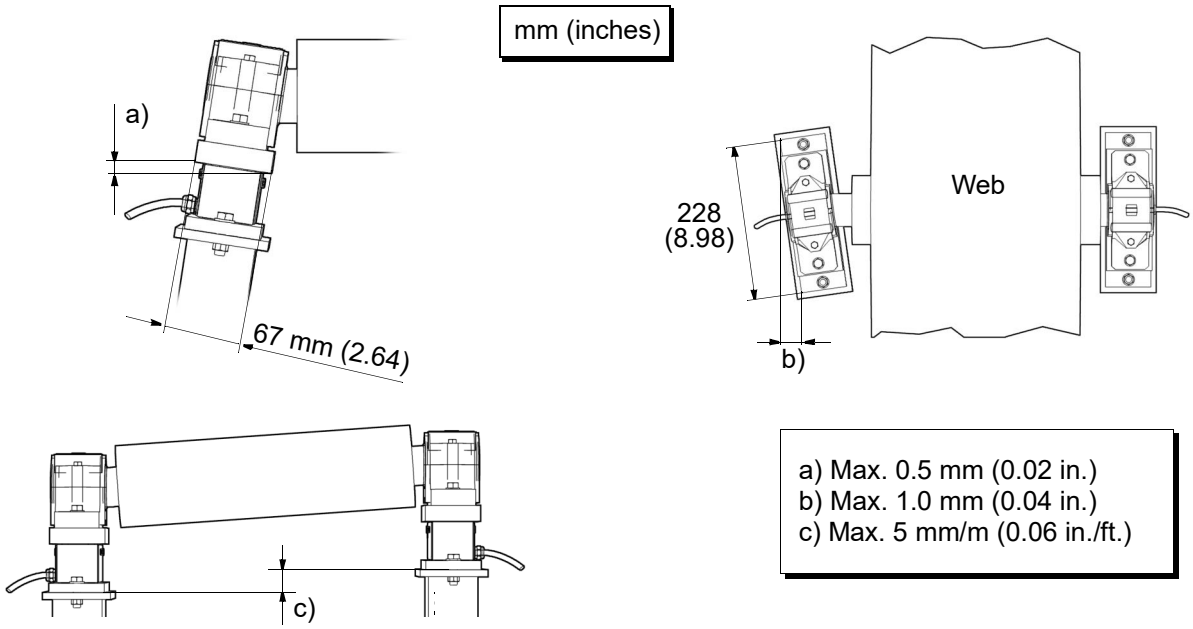

Figure C-1. Installation Requirements

C.5 Mounting Alternatives, Calculating Force and Calculating Wrap Gain

C.5.1 Horizontal Mounting

PFTL 301E

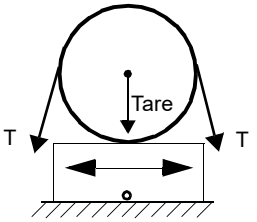

No horizontal web tension force applied to the load cell.

= Measurement direction

In most cases, horizontal mounting is the most obvious and simplest solution. The load cell should thus be mounted horizontally when possible.

However, should the machine design require inclined mounting of the load cell or should the web path not give a sufficient horizontal force, see figure, the inclined mounting is permitted and the calculations are somewhat more complex, (see Section C.5.2, Inclined Mounting).

PFTL 301E

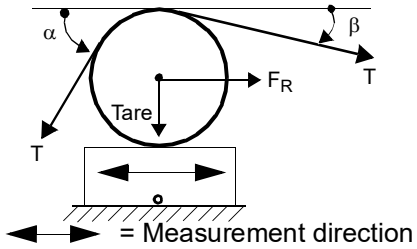

$F_R = T \times (\cos\beta - \cos\alpha)$

$F_{RT} = 0$ (Tare force is not measured)

$F_{Rtot} = F_R + F_{RT} = T \times (\cos\beta - \cos\alpha)$

$T\ (\text{Tension}) = \text{Wrap gain} \times F_R$

$\text{Wrap gain} = \frac{T}{F_R} = \frac{T}{T(\cos\beta - \cos\alpha)}$

$\text{Wrap gain} = \frac{1}{\cos\beta - \cos\alpha}$

The PFTL 301E load cell measures the horizontal forces applied to its top surface. The load cell can measure in both directions. The vertical applied forces are not measured and do not influence the horizontal measurement. There is one source of horizontal forces; the force from the web tension (the tare weight has no force component in measuring direction). See the force calculations in the figure.

Divide the total horizontal force F_{Rtot} by two to get the required capacity of each load cell.

Do not oversize an ABB load cell for overload purposes as the load cell has sufficient overload capacity.

C.5.2 Inclined Mounting

PFTL 301E

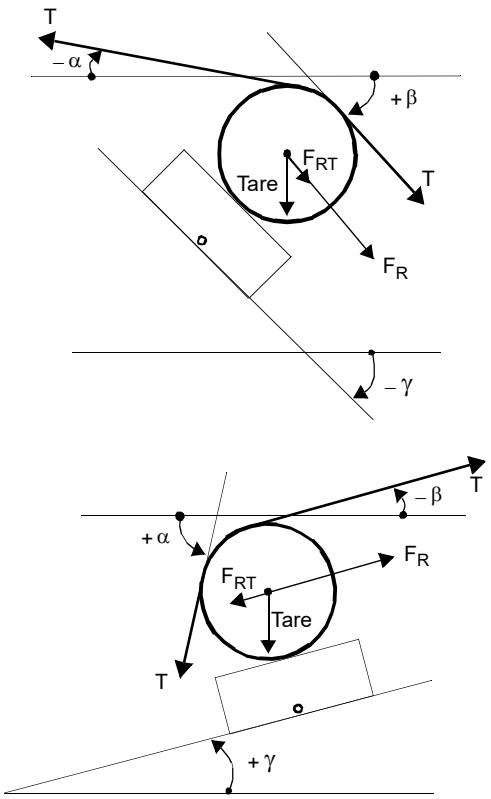

$F_R = T \times [\cos(\beta + \gamma) - \cos(\alpha - \gamma)]$

$F_{RT} = -\text{Tare} \times \sin\gamma$

$F_{Rtot} = F_R + F_{RT} =$

$T \times [\cos(\beta + \gamma) - \cos(\alpha - \gamma)] + (-\text{Tare} \times \sin\gamma)$

$T\ (\text{Tension}) = \text{Wrap gain} \times F_R$

$$\text{Wrap gain} = \frac{T}{F_R} = \frac{T}{T[\cos(\beta + \gamma) - \cos(\alpha - \gamma)]}$$

$$\text{Wrap gain} = \frac{1}{\cos(\beta + \gamma) - \cos(\alpha - \gamma)}$$

Sometimes it is necessary to mount the load cell on an incline due to mechanical design constraints of the machine or the need to have a proper force component applied to the load cell.

Inclined mounting adds a component of tare force in the measuring direction and modifies the force components as shown.

NOTE

When calculating, it is important that the angles are set into the equations with the correct signs in relation to the horizontal plane.

C.6 Force Calculation for Measurement with a Single Load Cell

In some cases, it is sufficient to measure the tension with only a single load cell mounted at one end of the roll. The roll should nevertheless be supported at both ends.

C.6.1 The Most Common and Simple Solution

The most obvious and simple solution is horizontal mounting with the web evenly distributed and centered on the roll.

As long as the roll is supported at both ends, the same calculations given in Section C.5, Mounting Alternatives, Calculating Force and Calculating Wrap Gain are valid.

NOTE

The accuracy of a single load cell measurement is highly dependent on how well the center of force can be determined. Since the cross-directional stress distribution generally is somewhat uneven, this is not easily done. The load cell will, however, produce a stable and repeatable measurement.

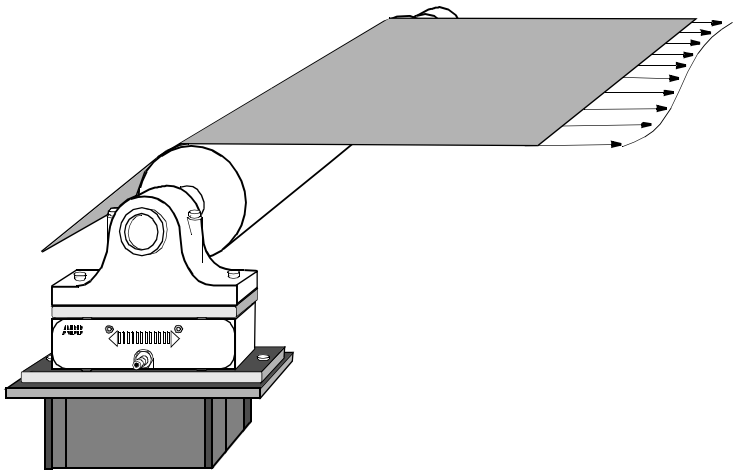

Figure C-2. Cross-directional stress distribution

C.6.2 Force Calculation when the Web is not Centered on the Roll

Use the calculations below for horizontal and inclined mounting when the web is not centered on the roll.

The applied force at the load cell will be proportional to the distance between the tension force center and the load cell centerline, see figure.

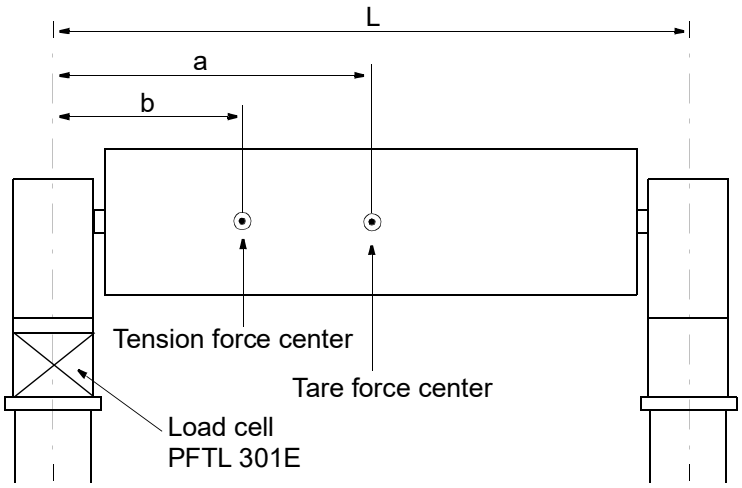

Calculation procedure:

1. Horizontal or inclined mounting?
2. Calculate F_R and F_{RT}, see Section C.5, Mounting Alternatives, Calculating Force and Calculating Wrap Gain.
3. Use the following equations:

   F_R for single load cell $= F_R \times \frac{L-b}{L}$

   F_{RT} for single load cell $= F_{RT} \times \frac{L-a}{L}$

   F_{Rtot} for single load cell = F_R for single load cell + F_{RT} for single load cell

   where:

   L = Distance between load cell centerline and the opposite bearing centerline

   a = Distance between tare force center and load cell centerline

   b = Distance between tension force center and load cell centerline

C.7 Mounting the Load Cells

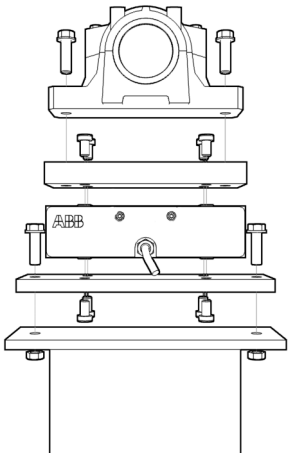

The instructions below apply to a typical mounting arrangement. Variations may be allowed, provided that they comply with the requirements in Section C.4, Installation Requirements.

1. Clean the foundation and other mounting surfaces.
2. Fit the lower adapter plate to the load cell.
   Tighten the screws (included in delivery) with a torque wrench to 24 Nm (18 ft.-lb).
3. Fit the load cell and the lower adapter plate to the foundation,
   but do not fully tighten the screws.
4. Fit the upper adapter plate to the load cell.
   Tighten the screws (included in delivery) with a torque wrench to 24 Nm (18 ft.-lb).
5. Fit the bearing housing and the roll to the upper adapter plate,
   but do not fully tighten the screws.

CAUTION

When mounting bearings or other adjacent details to adapter plates, screws must not protrude into the load cell. The load cell can be damaged by an excessive applied force.

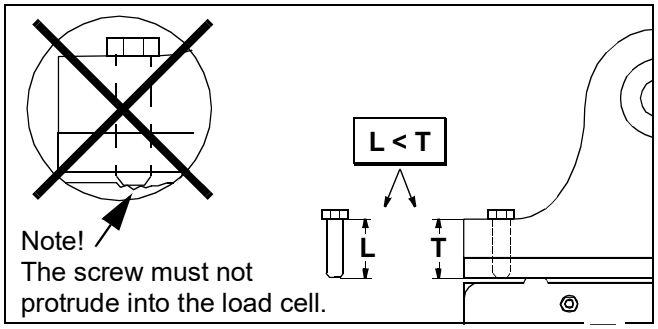

6. Adjust the load cells according to the installation requirements.
   Tighten the foundation screws.
7. Adjust the roll according to the installation requirements.
   Tighten the screws in the upper adapter plate.

C.7.1 Routing the Load Cell Cable

The cable must be supported with clamps and routed to prevent force shunting through the cable.

C.7.2 Connecting the Load Cell Extension Cable

See Section C.10, Mounting Instruction, Cable Connector, 3BSE019064, Rev. A.

C.8 Technical Data

PFTL 301E					Unit
Nominal load					
Nominal load in measuring direction, F_{nom} For h = 135 mm (5.3 inch)	0.1 (22)	0.2 (45)	0.5 (112)	1.0 (225)	kN (lbs)
Permitted transverse load within the accuracy, F_{Vnom}	0.3 (67)	0.6 (135)	1.5 (337)	3.0 (675)	
Permitted axial load within the accuracy, F_{Anom} For h = 135 mm (5.3 inch)	0.5 (112)	0.5 (112)	1.0 (225)	1.0 (225)	
Extended load in measuring direction with accuracy class, bidirectional measurement ± 2%, F_{ext}	0.15 (33)	0.3 (67)	0.75 (169)	1.5 (337)	
Overload capacity					
Max. load in measuring direction without permanent change of data, F_{max} [1]. For h = 135 mm (5.3 inch)	0.3 (67)	0.6 (135)	1.5 (337)	3.0 (674)	kN (lbs)
Max. load in transverse direction without permanent change of data, F_{Vmax} (1)	0.5 (112)	1.0 (225)	2.5 (562)	5.0 (1125)	
Max. load in axial direction without permanent change of data, F_{Amax}. For h = 135 mm (5.3 inch)	0.5 (112)	0.5 (112)	1.0 (225)	1.0 (225)	
Spring constant	2 (11.3)	4 (22.6)	7 (39.7)	8 (44.6)	kN/mm (1000 lbs/inch)
Accuracy					
Accuracy class	± 1.0				%
Linearity deviation	< ± 0.5				
Repeatability error	< ± 0.1				
Hysteresis	< ± 0.3				
Mechanical data					
Weight without adapter plates	approx. 2.5 (approx. 5.5)				kg (lbs)
Weight including adapter plates	approx. 5.4 (approx. 11.9)				
Length, width and height are given in Section C.11, Dimension Drawing, 3BSE019040D0094, Rev. C.					
Material					
Load cell	SS 2387 stainless steel, DIN X4CrNiMo 165. Corrosion resistance properties similar to AISI 304.				
Adapter plates	SS 1312, finished by black chromating. ASTM A 238-79 Grade C.				

(1) F_{max} and F_{Vmax} are allowed at the same time.

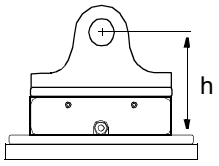

Figure C-3. Building height

Table C-1. Environmental data for load cell PFTL 301E

PFTL 301E		Unit
Compensated temperature range	+20 - +60 (68 - 140)	°C (°F)
Zero point drift	< ±150 (83)	ppm/K (ppm/°F)
Sensitivity drift	< ± 250 (139)	
Working temperature range	-10 - +80 (14 - 176)	°C (°F)
Zero point drift	< ± 250 (139)	ppm/K (ppm/°F
Sensitivity drift	< ± 350 (194)	
Storage temperature range	-40 - +90 (-40 - 194)	°C (°F)
Degree of protection	IP 66 acc. to EN 60 529	

Table C-2. Mounting screws

Type of screws	Strength class	Dimension	Tightening torque
Electro-zinc plated steel screws, lubricated with oil or emulsion. Strength class according to ISO 898/1.	8.8	M8	24 Nm (18 ft-lb)

C.9 Cable Diagram 3BSE028140D0065, Page 1/5, Rev. D

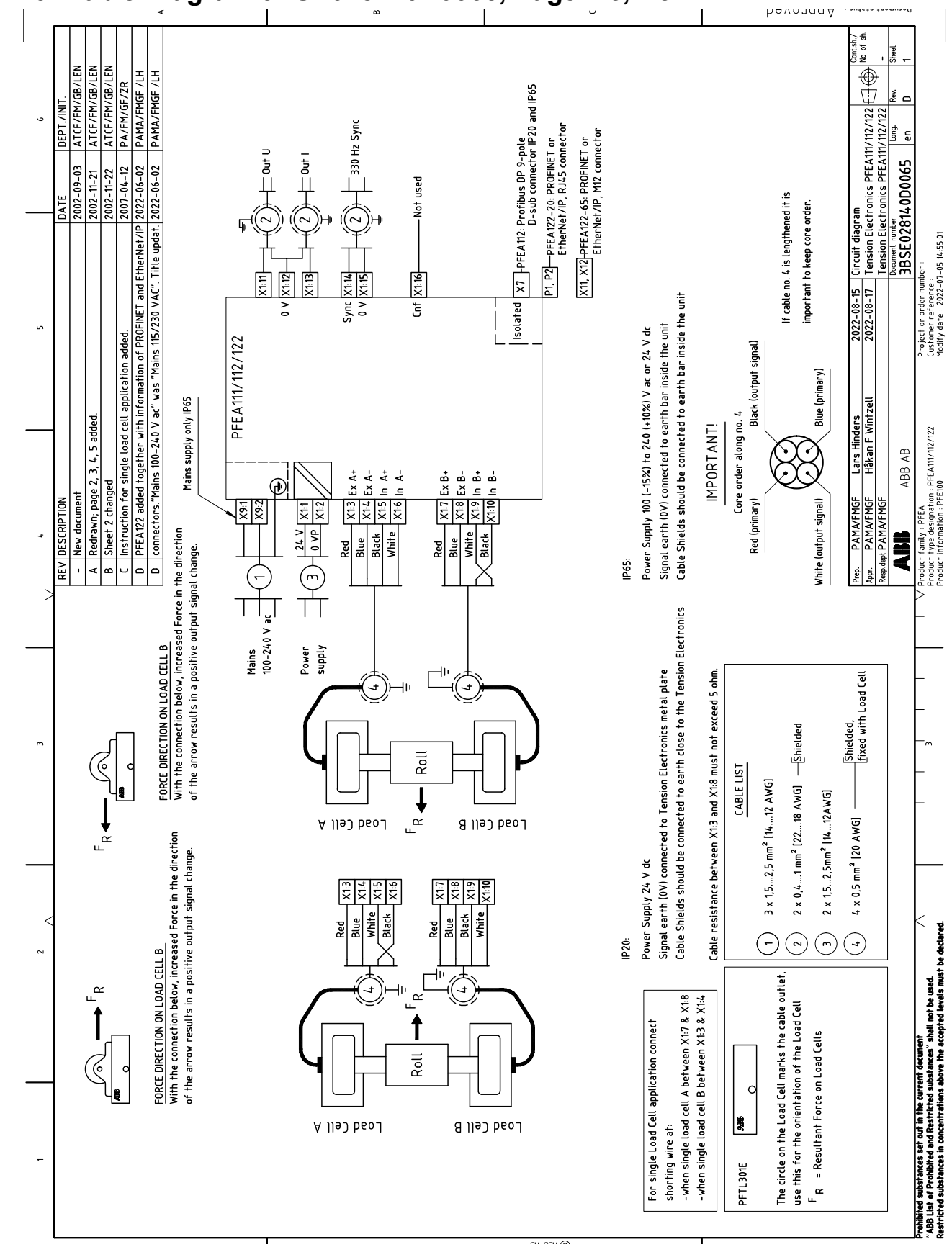

C.10 Mounting Instruction, Cable Connector, 3BSE019064, Rev. A

REV	DESCRIPTION	DATE	DEPT./INIT.
-	New Document	1999.07.07	SEAPR / AGB / JRK
A	Core order along cable added.	00-02-25	SEAPR / AGB / JK

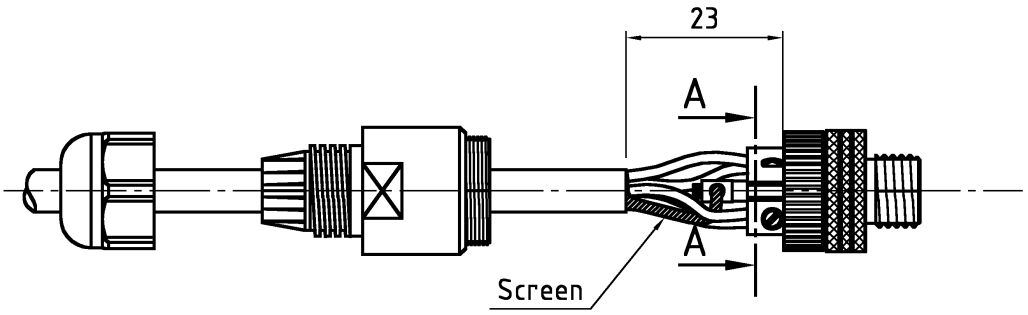

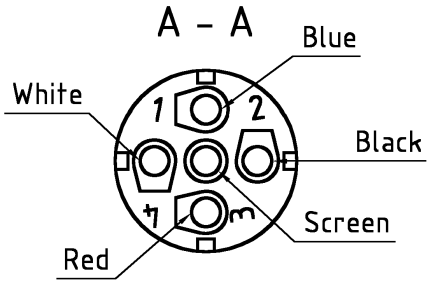

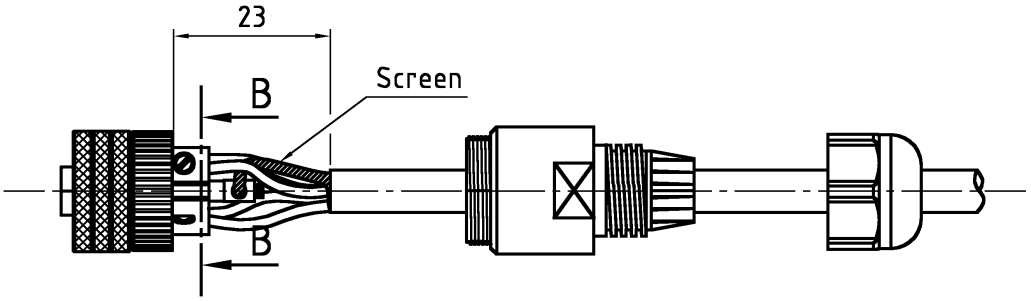

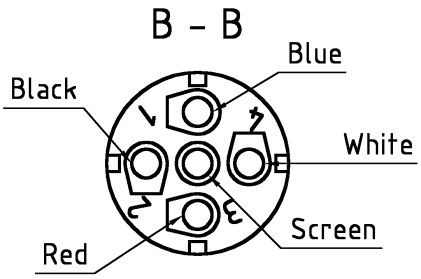

IMPORTANT!

Core order along cable

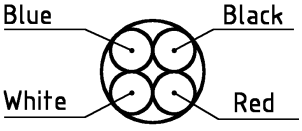

Prep.	SEAPR/AGB	Hugosson Mattias	2000-02-25	INSTRUCTION			Cont.sh./ No of sh.
Appr.	SEAPR/AGB	Carlqvist Ulf	2000-02-29	Mounting instr. for cable connector			
Resp.dept	SEAPR/AGB			Monteringsinstruktion för kontakt			
ABB Automation Products AB				Document number 3BSE019064	Lang. en	Rev. A	Sheet 1

C.11 Dimension Drawing, 3BSE019040D0094, Rev. C

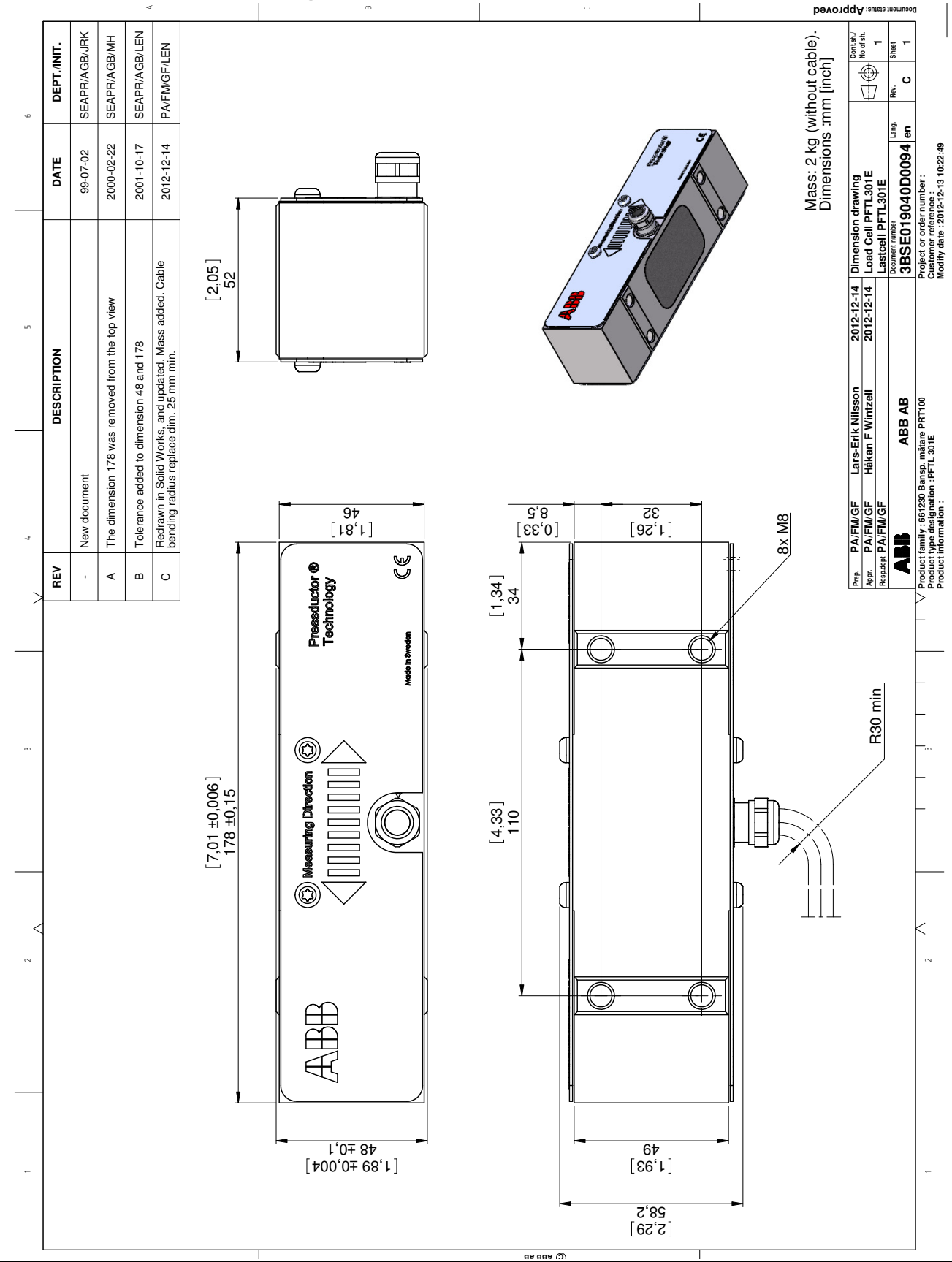

C.12 Assembly Drawing, 3BSE019040D0096, Rev. C

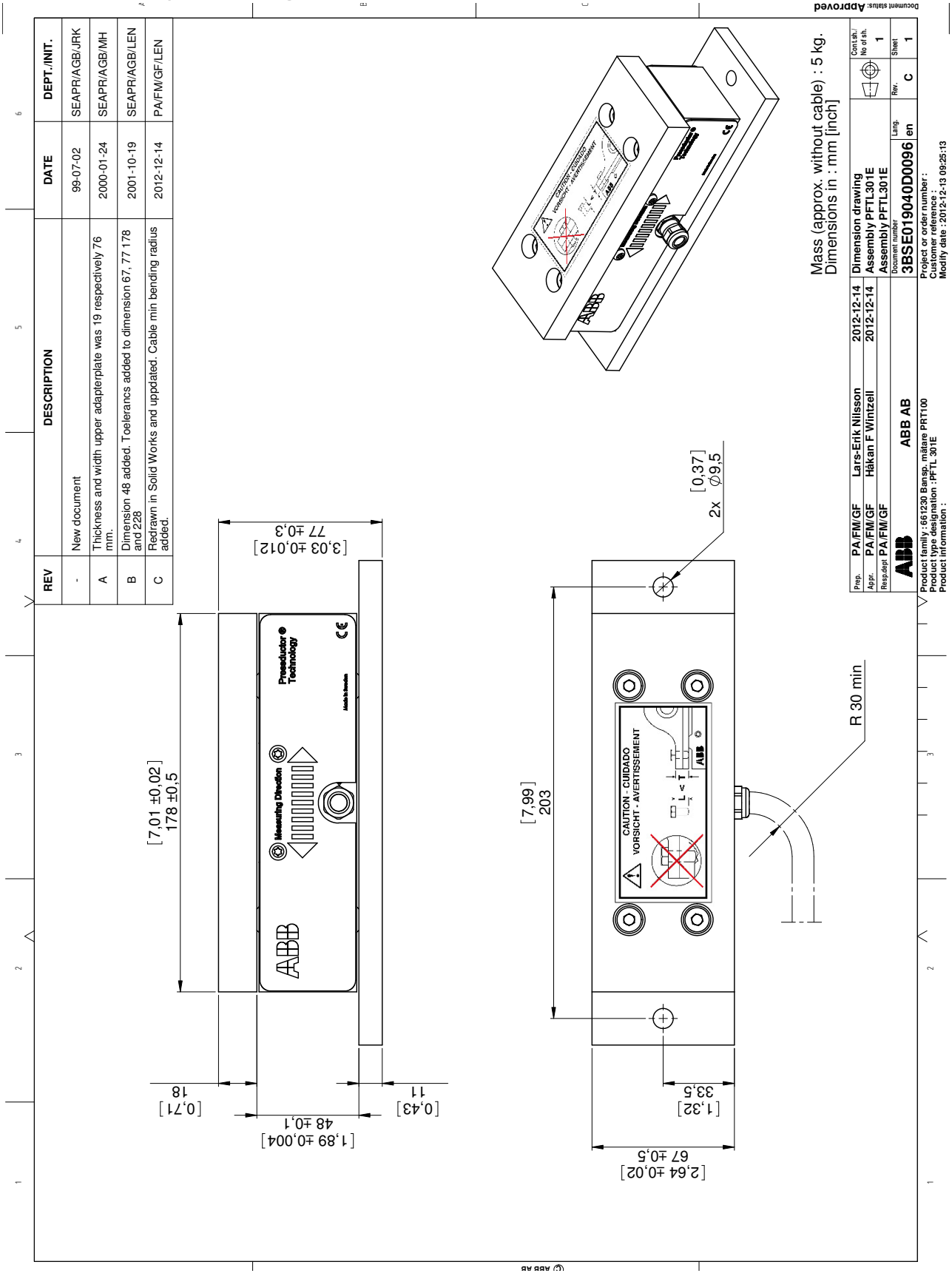

Appendix D PFRL 101 - Designing the Load Cell Installation

D.1 About This Appendix

This appendix describes the procedure for designing the load cell installation.

The following sections are included:

- Basic application considerations
- Designing the load cell installation (step-by-step guide)
- Installation requirements
- Force and wrap gain calculation
  - Horizontal mounting
  - Inclined mounting
  - Single side measurement
- Mounting the load cells
- Technical data
- Drawings
  - Cable diagram(s)
  - Dimension drawing(s)

D.2 Basic Application Considerations

Each application has its own individual demands that have to be considered; though a few basic considerations tend to repeat themselves.

- What type of process is involved (papermaking, converting, etc.)?
  Is the environment demanding (temperature, chemicals, etc.)?
- What is the tension measurement purpose; indication or closed loop control?
  Are there any specific accuracy demands involved?
- What is the machine design like? Is there the possibility to modify the design, in order to fit the most suitable load cell, or is the machine design fixed?
- What are the forces acting on the roll like (size and direction)?
  Can they be altered by redesign?

If these questions are dealt with thoroughly, the installation is very likely to be successful. However, the extent to which measurement accuracy is needed, defines the requirements when designing a load cell installation.

D.3 Step-by-Step Guide for Designing the Load Cell Installation

The procedure below defines the main considerations involved in designing a load cell installation.

1. Check load cell data so that environmental demands are met.
2. Calculate forces; vertical, horizontal and axial (cross directional).
3. Size and orient load cell so that the guidelines below are met:
   a. Try to achieve a measured value no less than 10% of web tension, in the load cell measurement direction!
   b. Select load cell size so that it is loaded as close as possible to its nominal load! Do not dimension Force component of Tension in measuring direction, F_R, for less than 10% of the load cell nominal load!
   c. If the span between maximum and minimum tension in the process is large, select load cell so that the maximum tension will be in the load cell extended range (when applicable)!
   d. The measured force component of web tension is recommended to be at least 30% of tare force component (roll weight) acting in load cell measurement direction. The reason for this recommendation is load cell signal stability, especially when the system operates in a large temperature span.
   This means that if $F_{RT} < 1/3$ of F_{nom}, F_R should be at least 10% of F_{nom}.
   For larger F_{RT}, lowest F_R is recommended to be at least 30% of F_{RT}.

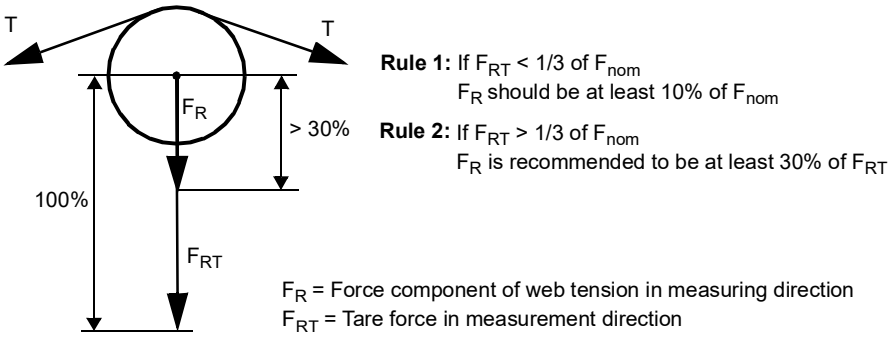

   e. Check load cell data so that limits for building height, transverse and axial forces are not exceeded.
4. Design base frame and/or adapter plates.

D.4 Installation Requirements

To achieve the specified accuracy, the best possible reliability and long-term stability, install the load cells in accordance with the requirements below.

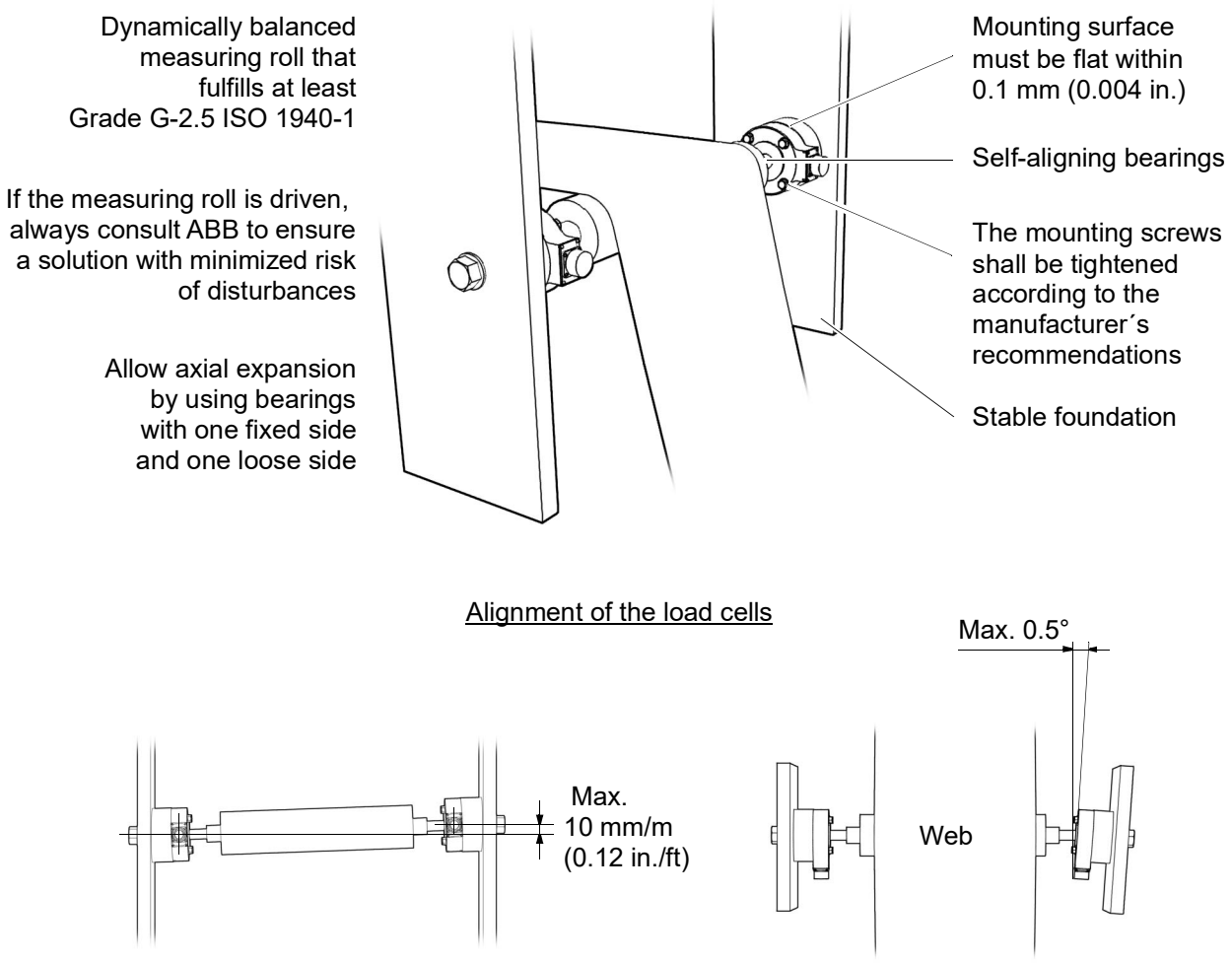

Figure D-1. Installation requirements

D.5 Load Cell Orientation Depending on Measurement Direction

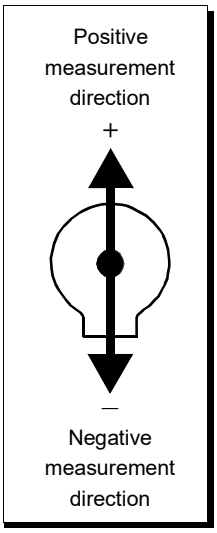

The radial load cell will only measure forces along the axis as shown in the figure to the left. Therefore the orientation of the measurement direction is important to the amount of signal output. To help understand how the orientation of the measurement direction affects the output see the figures below.

Orientation of measurement direction	Effects (Two load cells are assumed)
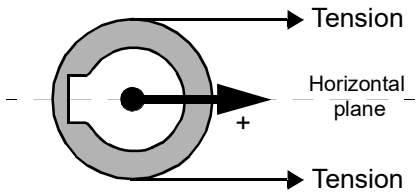	The load cells measure 2 × Tension, but do not measure the roll weight (Tare).
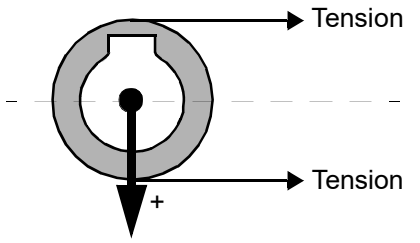	The load cells measure no Tension, but do measure the roll weight (Tare). Rotating the load cells counterclockwise will begin to gain in signal from the web tension and will eliminate the output due to roll weight (Tare). Maximum tension signal will occur at 90° of rotation.
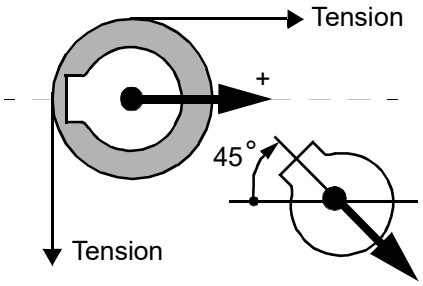	The load cells measure 1 × Tension, but do not measure the roll weight (Tare). Rotate the load cells 45° clockwise and the load cells sense 1.4 × Tension and 70% of the roll weight.

D.6 Mounting Alternatives, Calculating Force and Calculating Wrap Gain

D.6.1 Horizontal Mounting

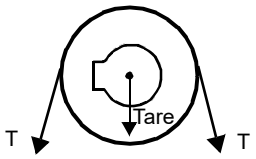

No horizontal web tension force applied to the load cell.

The PFRL 101 load cells can be mounted at any incline angle, 0 - 360°. However, it is recommended to minimize the influence of forces other than the tension to be measured. In most cases this means an orientation where the tare force (vertical) is perpendicular to the measured force (horizontal).

However, should the machine design require inclined mounting of the load cell or should the web path not give a sufficient horizontal force, see figure, the inclined mounting is permitted and the calculations are somewhat more complex, (see Section D.6.2, Inclined Mounting).

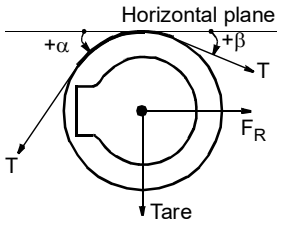

$F_R = T \times (\cos \beta - \cos \alpha)$

$F_{RT} = 0$ (Tare force is not measured)

$F_{Rtot} = F_R + F_{RT} = T \times (\cos \beta - \cos \alpha)$

F_{Rtot} / load cell = $F_{Rtot} / 2$

T (Tension) = Wrap gain $\times F_R$

$$\text{Wrap gain} = \frac{T}{F_R} = \frac{T}{T(\cos\beta - \cos\alpha)}$$

$$\text{Wrap gain} = \frac{1}{\cos\beta - \cos\alpha}$$

The load cell measures the horizontal forces. The load cell can measure in both directions. The vertical applied forces are not measured and do not influence the horizontal measurement. There is one source of horizontal forces, the force from the web tension (the tare weight has no force component in measuring direction). See force calculations in figure.

Divide the total vertical force F_{Rtot} by two to get the required capacity of each load cell.

Do not oversize an ABB load cell for overload purposes as the load cell has sufficient overload capacity.

D.6.2 Inclined Mounting

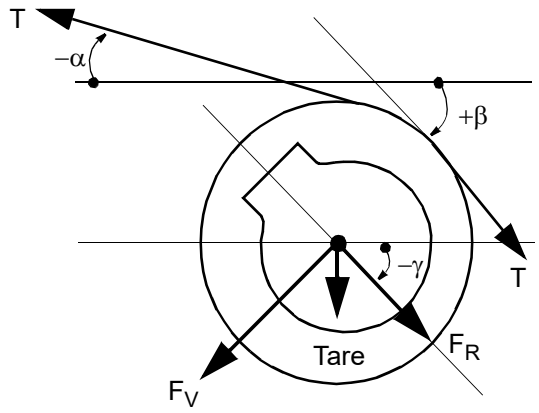

$$F_R = T \times [\cos(\beta + \gamma) - \cos(\alpha - \gamma)]$$

$$F_{RT} = -\text{Tare} \times \sin\gamma$$

$$F_{Rtot} = F_R + F_{RT} =$$
$$T \times [\cos(\beta + \gamma) - \cos(\alpha - \gamma)] + (-\text{Tare} \times \sin\gamma)$$

$$T\ (\text{Tension}) = \text{Wrap gain} \times F_R$$

$$\text{Wrap gain} = \frac{T}{F_R} = \frac{T}{T[\cos(\beta + \gamma) - \cos(\alpha - \gamma)]}$$

$$\text{Wrap gain} = \frac{1}{\cos(\beta + \gamma) - \cos(\alpha - \gamma)}$$

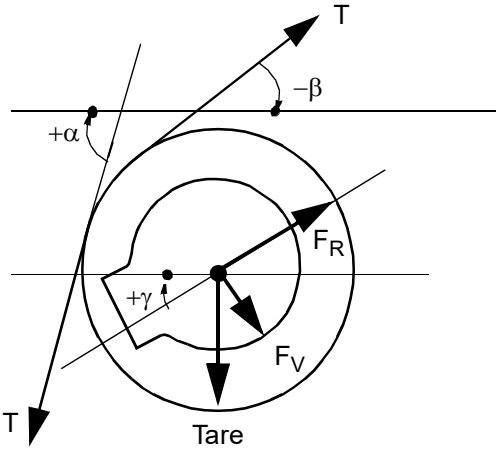

Sometimes it is necessary to mount the load cell on an incline due to mechanical design constraints of the machine or due to the need to have a proper force component applied to the load cell.

Inclined mounting adds a component of tare force and modifies the force components as shown.

NOTE

When calculating it is important that the angles are set into the equations with the correct signs relative to the horizontal plane.

D.7 Force Calculation for Measurement with a Single Load Cell

In some cases, it is sufficient to measure the tension with only a single load cell mounted at one end of the roll. The roll should nevertheless be supported at both ends.

D.7.1 The Most Common and Simple Solution

The most obvious and simple solution is horizontal mounting with the web evenly distributed and centered on the roll.

As long as the roll is supported at both ends, the calculations given in Section D.6, Mounting Alternatives, Calculating Force and Calculating Wrap Gain are valid. Note that the output signal is a summation.

NOTE

The accuracy of a single load cell measurement is highly dependent on how well the center of force can be determined. Since the cross-directional stress distribution generally is somewhat uneven, this is not easily done. The load cell will, however, produce a stable and repeatable measurement.

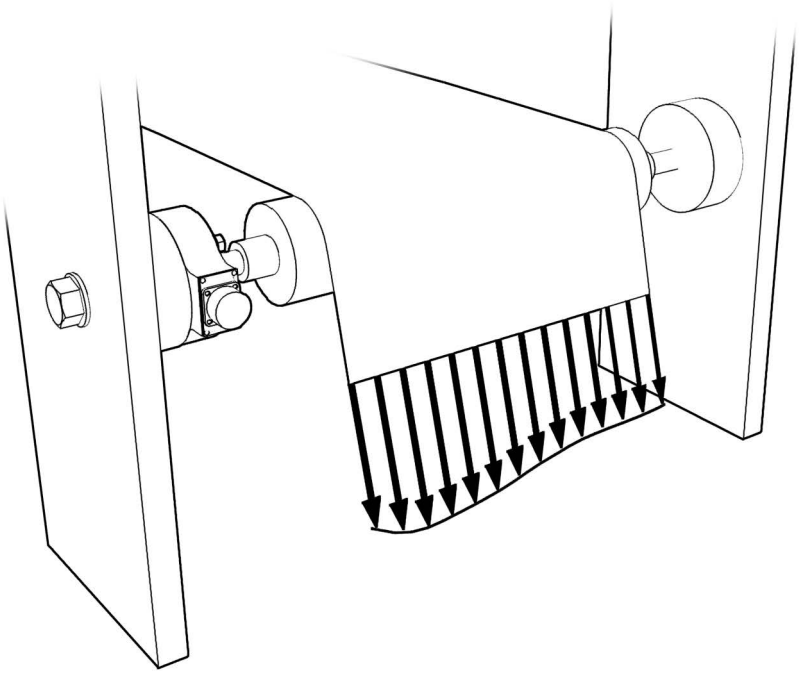

Figure D-2. Cross-directional stress distribution

D.7.2 Force Calculation when the Web is not Centered on the Roll

Use the calculations below for horizontal and inclined mounting when the web is not centered on the roll.

The applied force at the load cell will be proportional to the distance between the tension force center and the load cell centerline.

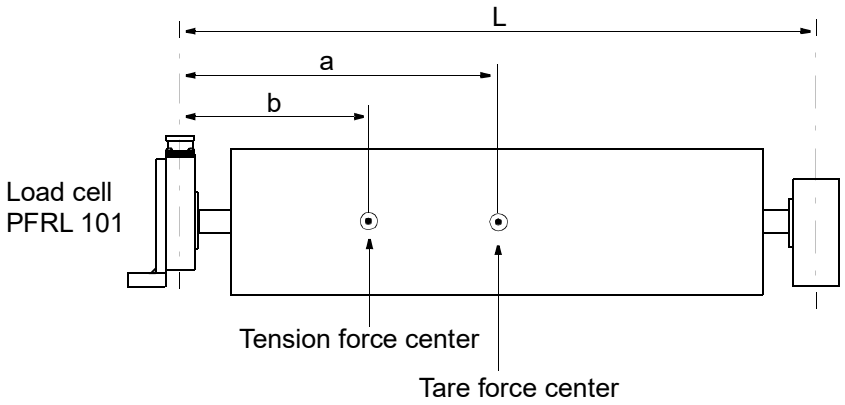

Calculation procedure:

1. Horizontal or inclined mounting?
2. Calculate F_R and F_{RT}, see Section D.6, Mounting Alternatives, Calculating Force and Calculating Wrap Gain.
3. Use the following equations:

   F_R for single load cell $= F_R \times \frac{L-b}{L}$

   F_{RT} for single load cell $= F_{RT} \times \frac{L-a}{L}$

   F_{Rtot} for single load cell $=$ F_R for single load cell + F_{RT} for single load cell

   where:

   L = Distance between load cell centerline and the opposite bearing center line

   a = Distance between tare force center and load cell centerline

   b = Distance between tension force center and load cell centerline

D.8 Mounting the Load Cells

1. Mount the bearings in the load cells.

NOTE

Use tools and materials that do not damage the bearing or the load cell.

NOTE

One of the bearings is locked in position with retaining rings while the other bearing is only pressed into the correct position to allow axial expansion.

a. Mount one of the retaining rings into the load cell.

b. Arrange a counterstay as shown in the figure below.

c. Press the bearing to correct position.

NOTE

The bearing bed has only a slight interference fit, and, therefore, no heavy forces should be used.

d. Mount the other retaining ring into the load cell.

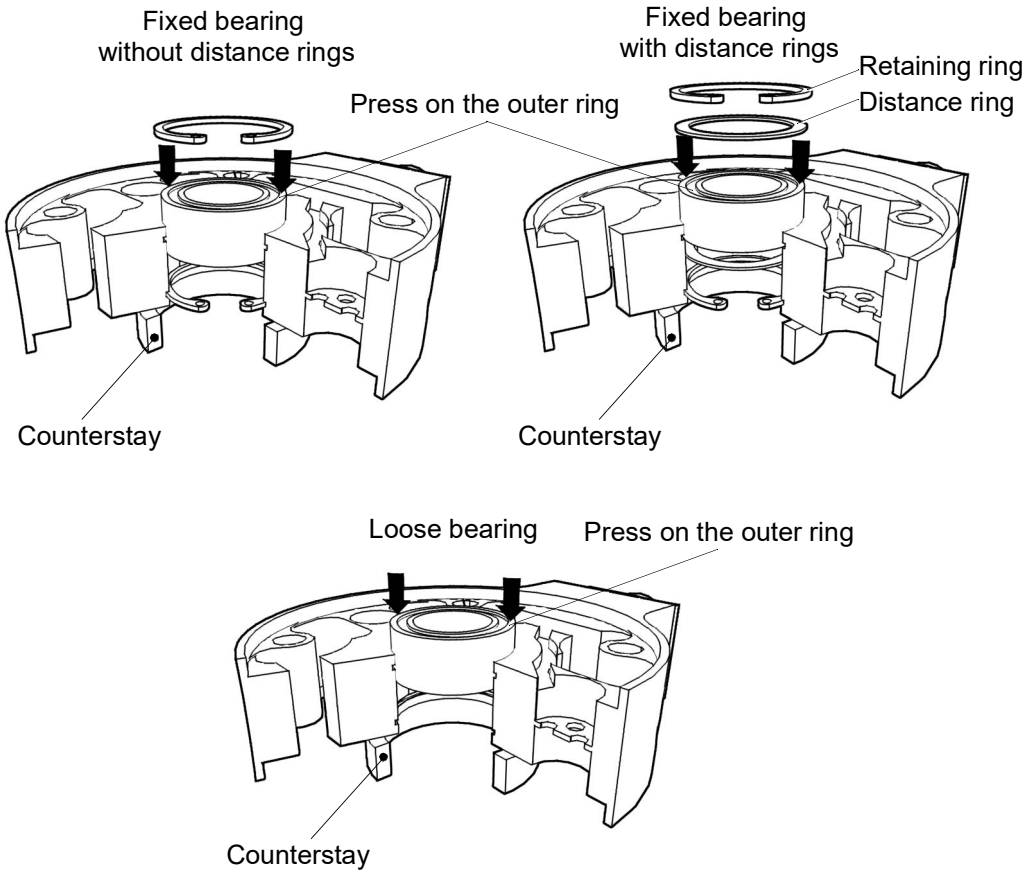

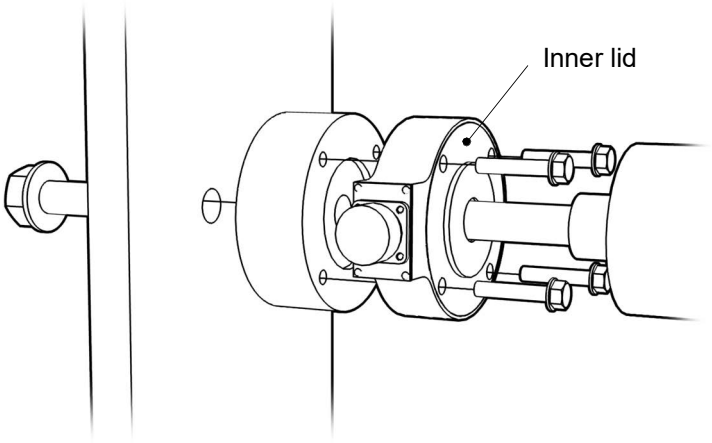

Example of load cell mounting

2. Mount distance spacers and shaft sealings, if necessary.
3. Put the inner load cell lids in position, and also four mounting screws in their holes.
4. Press the load cells onto the shaft (press on the inner rings of the bearings only).

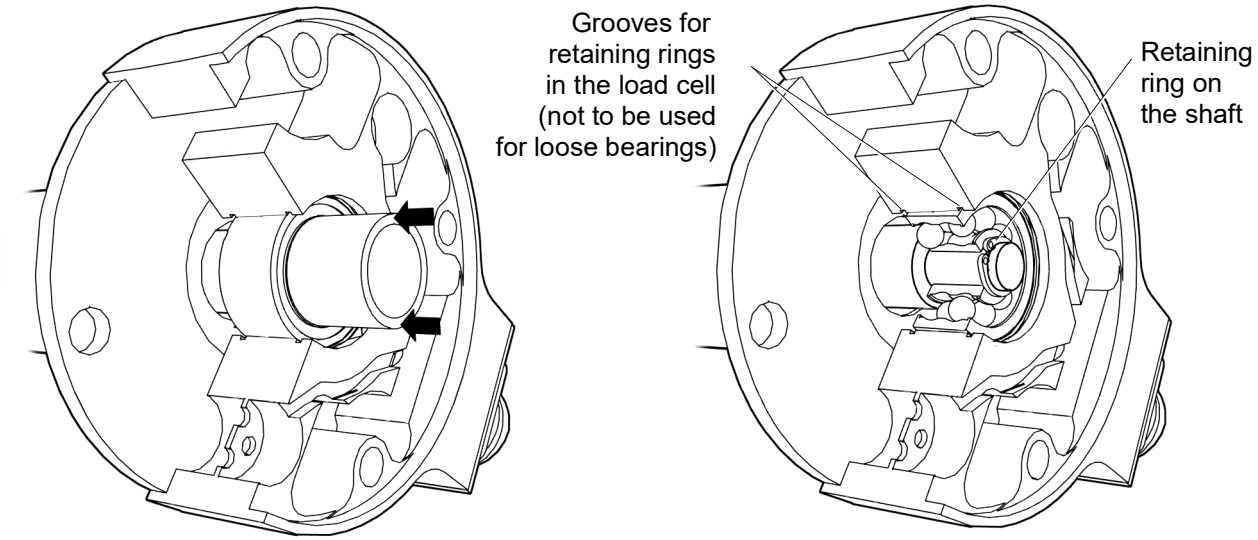

5. Mount the retaining rings for the bearings on the shaft.
   Put the outer lids in position.
6. Position the measuring roll complete with the load cells into the correct position on the machine.

   The load cell with the loose bearing is displaced towards the roll, in order to reduce the total length, so that the measuring roll with the load cells can be fitted in.

   When the roll is in position pull the load cell with the loose bearing back to its proper position.
7. Fix each load cell by using the four mounting screws.
   (tightening torque according to the manufacturer´s recommendations)
8. Adjust the shaft sealings, if necessary.

D.8.1 Mounting with Brackets

The optional bracket is intended to facilitate mounting on horizontal surfaces.

To achieve the best measuring direction, turn the load cell to a suitable position before drilling the bracket.

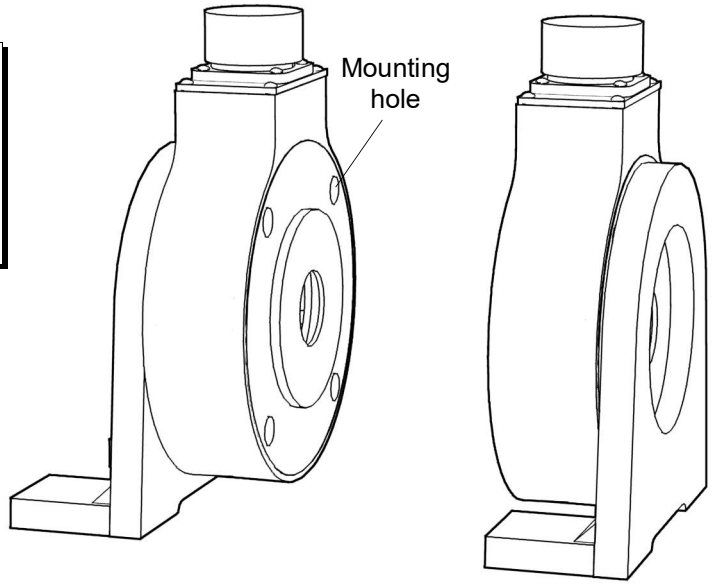

Possible ways of mounting using brackets.

1. Mark the location of the mounting holes.
2. Drill the holes and cut threads, according to Section D.18, Dimension Drawing, 3BSE010457, Rev. B.
3. Install according to the instructions in Section D.8, Mounting the Load Cells.

D.8.2 Mounting Screws for the Load Cells

The load cell shall be mounted with screws according to Table D-1.

NOTE

The screws shall be tightened according to the manufacturer´s recommendations.

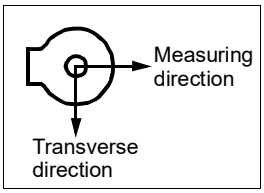

Screws with strength class 8.8 are sufficient for normal applications without large transverse forces or overloads.

Screws with strength class 12.9 and a higher tightening torque are recommended in applications where large transverse forces or overloads can occur.

Prior to mounting, check that the mounting surfaces are clean and flat, e.g. free of burrs and other damage.

Table D-1. Mounting Screws

Load cell PFRL 101	Screw dimension
A	M8 (5/16 UNC)
B	M8 (5/16 UNC)
C	M10 (3/8 UNC)
D	M12 (1/2 UNC)

D.8.3 Routing the Load Cell Cable

The cable must be supported with clamps and routed to prevent force shunting through the cable.

D.9 Technical Data

Table D-2. Technical Data for Different Types of Load Cell PFRL 101

PFRL 101	Type	Data	Unit
Nominal load			
Nominal load, F_{nom}	A	0.5 (112)	kN (lbs)
	B	1 (225)	
	C	0.5 (112) 1 (225) 2 (450)	
	D	5 (1125)	
Accepted transverse load within the accuracy class, F_{Vnom}	A	2.5 (562)	
	B	3 (674)	
	C	1.25 (281) 2.5 (562) 5 (1125)	
	D	10 (2250)	
Accepted axial load within the accuracy class, F_{Anom}	A	2.5 (562)	
	B	5 (1125)	
	C	2.5 (562) 5 (1125) 10 (2250)	
	D	25 (5625)	
Overload capacity			
Maximal load in the direction of measurement without permanent change of data, F_{max}	A	2.5 (562)	kN (lbs)
	B	5 (1125)	
	C	2.5 (562) 5 (1125) 10 (2250)	
	D	25 (5625)	
Spring constant	A	50 (286)	kN/mm (1000 lbs/inch)
	B	100 (572)	
	C	50 (286) 100 (572) 200 (1143)	
	D	500 (2858)	
Mechanical data			
Weight	A	1.5 (3.3)	kg (lbs)
	B	2.0 (4.4)	
	C	5.0 (11) 5.0 (11) 5.0 (11)	
	D	8.5 (18.7)	

Table D-2. Technical Data for Different Types of Load Cell PFRL 101

PFRL 101	Type	Data	Unit
Material	A B C D	SS 2387 stainless steel, DIN X4CrNiMo 16 5. Corrosion resistance properties similar to AISI 304.	
Accuracy			%
Accuracy class		± 0.5	
Repeatability error		< ± 0.1	
Compensated temperature range		+20 - +80 (68 - 176)	°C (°F)
Zero point drift		150 (83)	ppm/K (ppm/°F)
Sensitivity drift		150 (83)	
Working temperature range		–10 - +80 (14 - 176)	°C (°F)
Zero point drift		300 (167)	ppm/K (ppm/°F)
Sensitivity drift		300 (167)	
Storage temperature range		–40 - +80 (–40 - 176)	°C (°F)

D.10 Cable Diagram, 3BSE028140D0065, Page 3/5, Rev. D

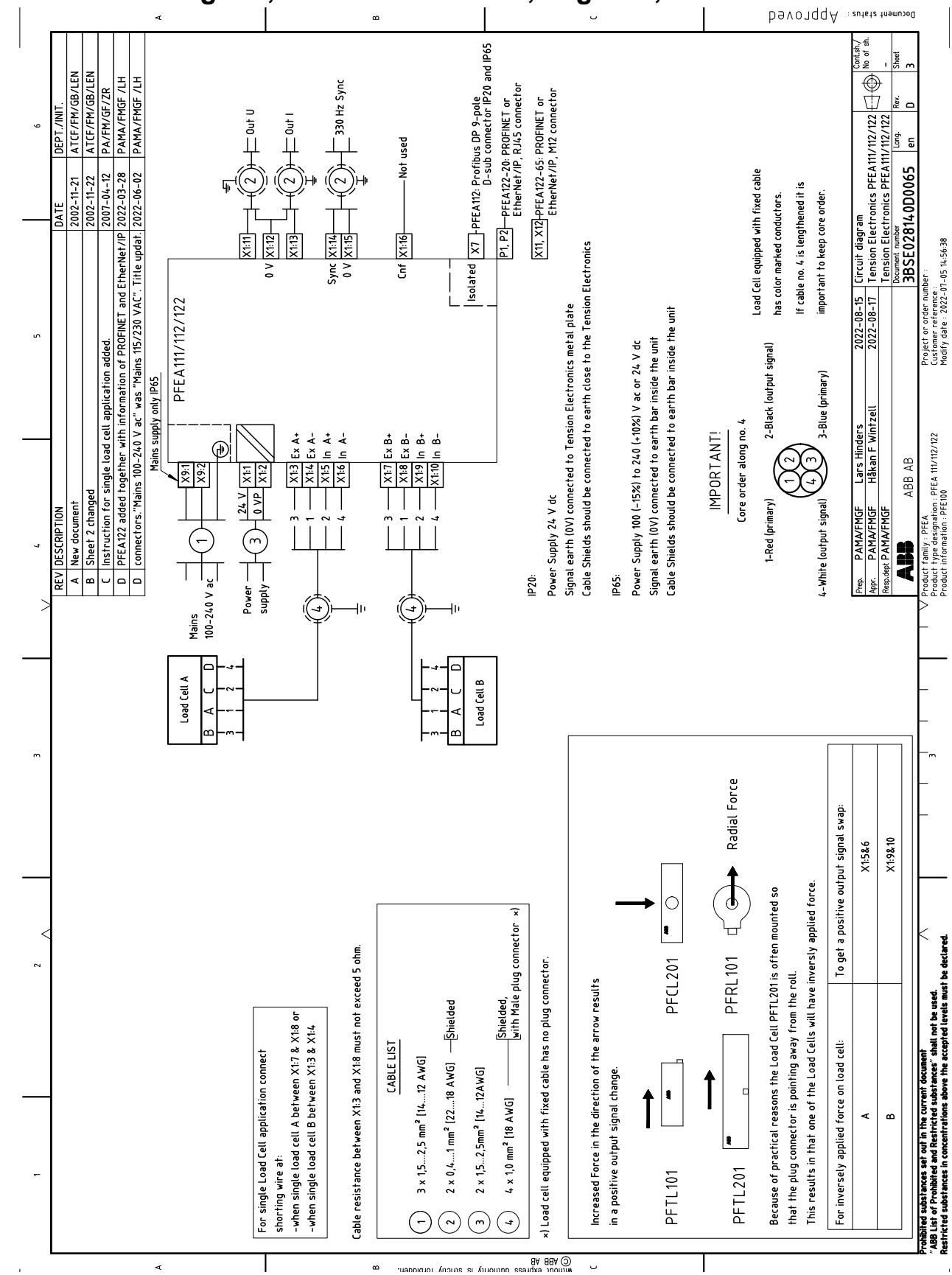

D.11 Cable Diagram, 3BSE028140D0065, Page 4/5, Rev. D

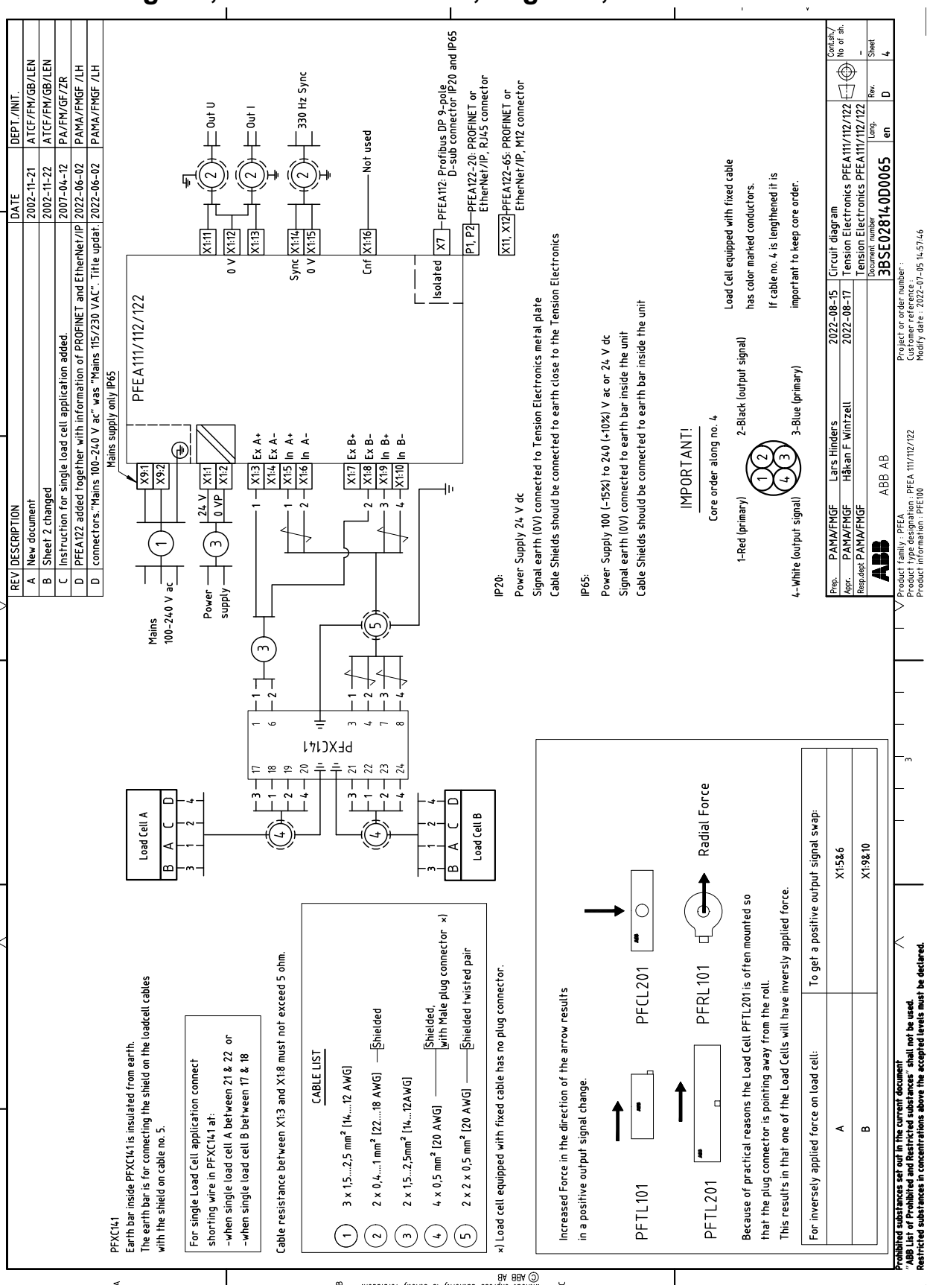

D.12 Dimension Drawing 3BSE004042D0003, page 1/2, Rev. O

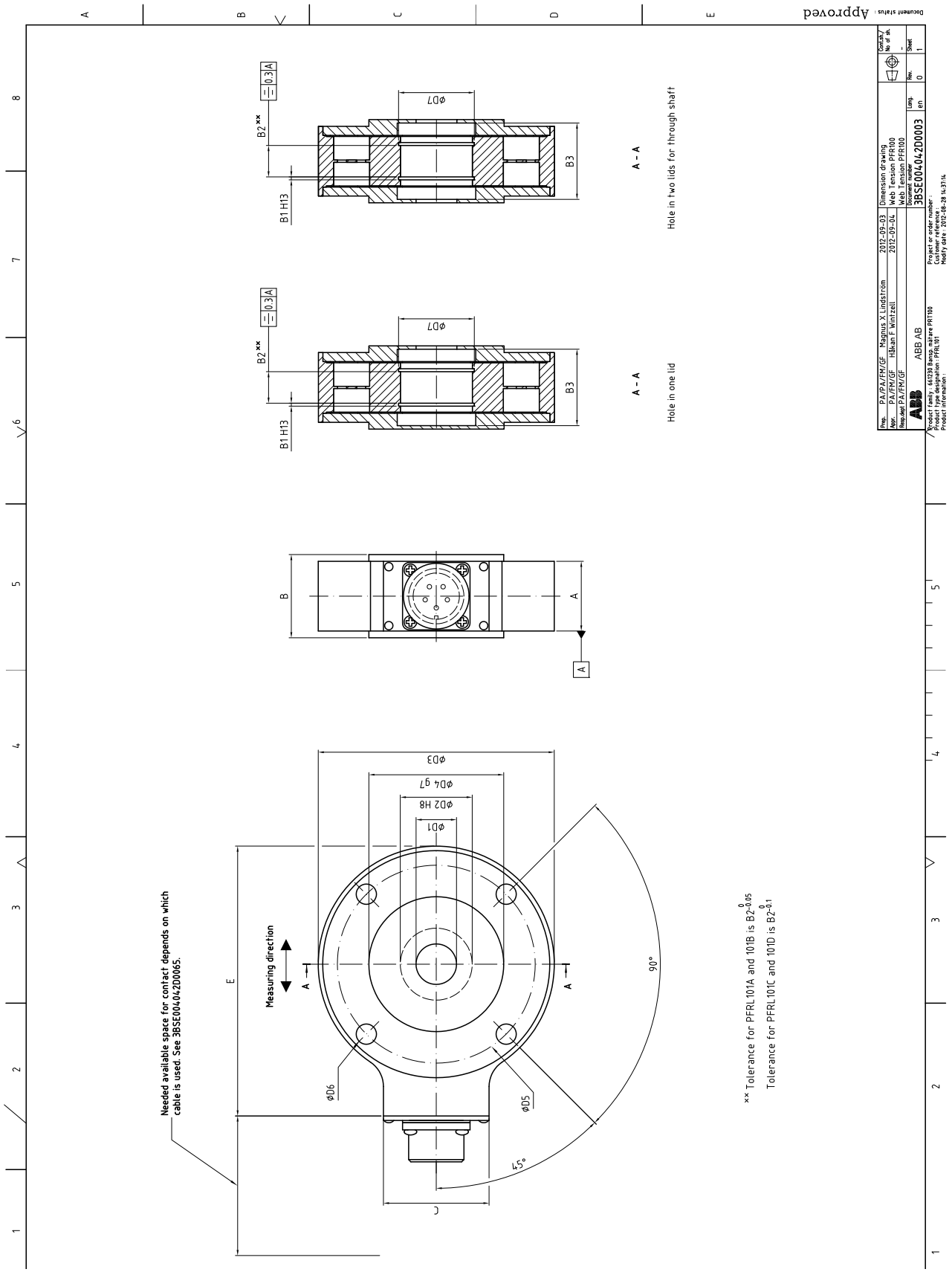

D.13 Dimension Drawing, 3BSE004042D0003, page 2/2, Rev. O

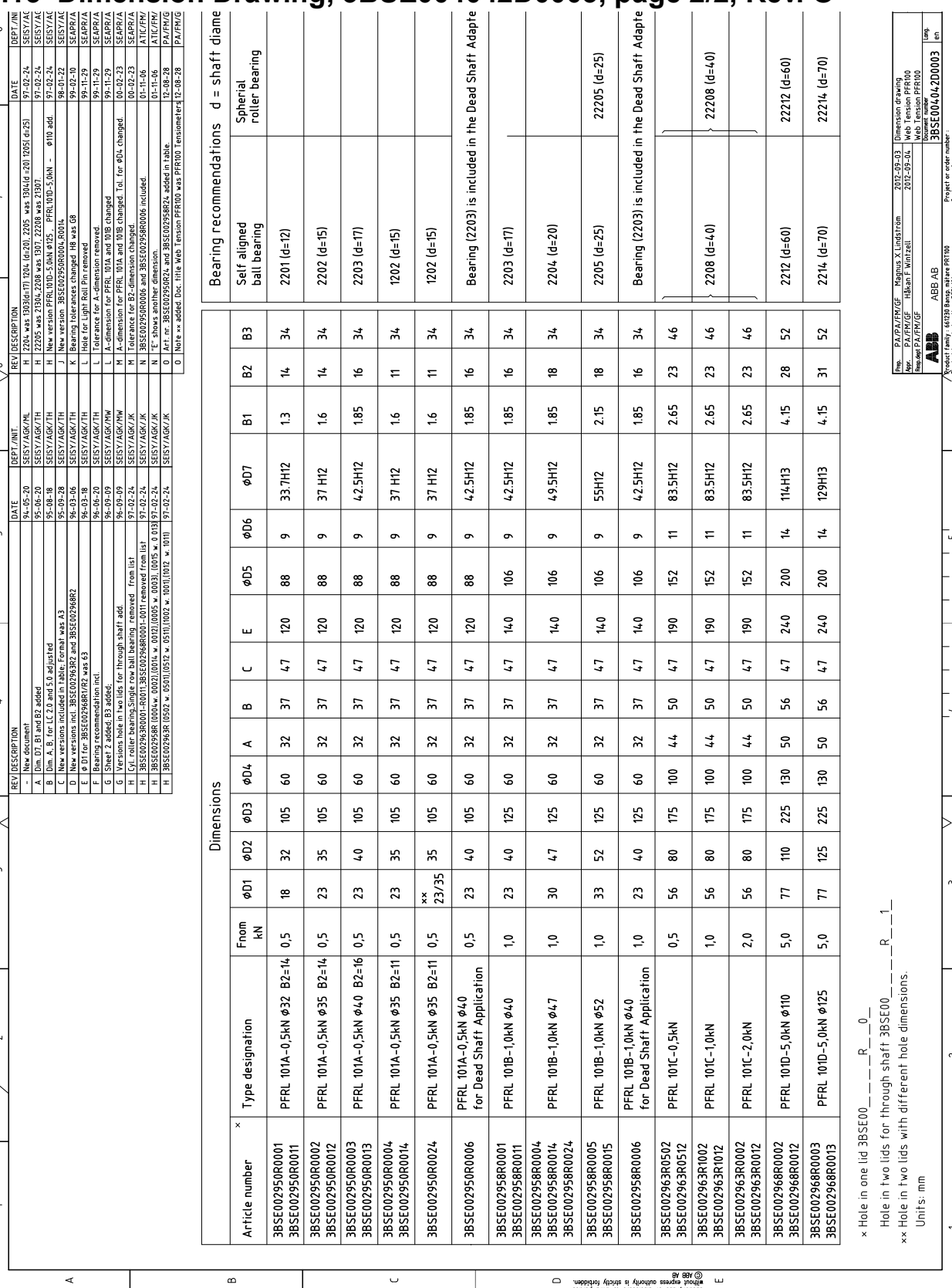

REV	DESCRIPTION	DATE	DEPT./INIT.
-	New document	94-05-20	SESY/AGK/ML
A	Dim. D7, B1 and B2 added	95-06-20	SESY/AGK/TH
B	Dim. A, B, for LC 2.0 and 5.0 adjusted	95-08-18	SESY/AGK/TH
C	New versions included in table. Format was A3	95-09-28	SESY/AGK/TH
D	New versions incl 3BSE002963R2 and 3BSE002968R2	96-03-06	SESY/AGK/TH
E	ø D1 for 3BSE002968R1/R2 was 63	96-03-18	SESY/AGK/TH
F	Bearing recommendation incl	96-06-20	SESY/AGK/TH
G	Sheet 2 added; B3 added;	96-09-09	SESY/AGK/MW
G	Versions hole in two lids for through shaft add.	96-09-09	SESY/AGK/MW
H	Cyl. roller bearing,Single row ball bearing removed from list	97-02-24	SESY/AGK/JK
H	3BSE002963R0001-R0011,3BSE002968R0001-0011 removed from list	97-02-24	SESY/AGK/JK
H	3BSE002958R 0004w 0002),0004w 0012),0005 w 0003), 0005 w 0013)	97-02-24	SESY/AGK/JK
H	3BSE002963R 0502 w 0501),0512 w 0511),1002 w 1001),1012 w 1011)	97-02-24	SESY/AGK/JK
H	2204 was 1303(d=17) 1204 (d=20), 2205 was 1304(d =20) 1205(d=25)	97-02-24	SESY/AGK/ML
H	22205 was 21304, 22208 was 1307, 22208 was 21307.	97-02-24	SESY/AGK/TH
H	New version PFRL101D-5,0kN ø125 . PFRL101D-5,0kN - ø110 add.	97-02-24	SESY/AGK/TH
J	New version 3BSE002958R0004, R0014	98-01-22	SESY/AGK/TH
K	Bearing tolerances changed H8 was G8	99-02-10	SESY/AGK/TH
L	Hole for Light Rail Pin removed	99-11-29	SESY/AGK/TH
L	Tolerance for A-dimension removed.	99-11-29	SESY/AGK/TH
L	A-dimension for PFRL 101A and 101B changed	99-11-29	SESY/AGK/MW
M	A-dimension for PFRL 101A and 101B changed. Tol. for ø04 changed.	00-02-23	SESY/AGK/JK
M	Tolerance for B2-dimension changed.	00-02-23	SESY/AGK/JK
N	3BSE002950R0006 and 3BSE002958R0006 included.	01-11-06	SESY/AGK/JK
N	"E" shows another dimension.	01-11-06	SESY/AGK/JK
O	Art. nr. 3BSE002950R24, and 3BSE002958R24 added in table.	12-08-28	SESY/AGK/JK
O	Note xx added. Doc. title Web Tension PFR100 was PFR100 Tensiometers	12-08-28	SESY/AGK/JK

Article number ×	Type designation	Fnom kN	ØD1	ØD2	ØD3	ØD4	A	B	C	E	ØD5	ØD6	ØD7	B1	B2	B3
3BSE002950R0001 3BSE002950R0011	PFRL 101A-0,5kN ø32 B2=14	0,5	18	32	105	60	32	37	47	120	88	9	33.7H12	1.3	14	34
3BSE002950R0002 3BSE002950R0012	PFRL 101A-0,5kN ø35 B2=14	0,5	23	35	105	60	32	37	47	120	88	9	37 H12	1.6	14	34
3BSE002950R0003 3BSE002950R0013	PFRL 101A-0,5kN ø40 B2=16	0,5	23	40	105	60	32	37	47	120	88	9	42.5H12	1.85	16	34
3BSE002950R0004 3BSE002950R0014	PFRL 101A-0,5kN ø35 B2=11	0,5	23	35	105	60	32	37	47	120	88	9	37 H12	1.6	11	34
3BSE002950R0024	PFRL 101A-0,5kN ø35 B2=11	0,5	×× 23/35	35	105	60	32	37	47	120	88	9	37 H12	1.6	11	34
3BSE002950R0006	PFRL 101A-0,5kN ø40 for Dead Shaft Application	0,5	23	40	105	60	32	37	47	120	88	9	42.5H12	1.85	16	34
3BSE002958R0001 3BSE002958R0011	PFRL 101B-1,0kN ø40	1,0	23	40	125	60	32	37	47	140	106	9	42.5H12	1.85	16	34
3BSE002958R0004 3BSE002958R0014 3BSE002958R0024	PFRL 101B-1,0kN ø47	1,0	30	47	125	60	32	37	47	140	106	9	49.5H12	1.85	18	34
3BSE002958R0005 3BSE002958R0015	PFRL 101B-1,0kN ø52	1,0	33	52	125	60	32	37	47	140	106	9	55H12	2.15	18	34
3BSE002958R0006	PFRL 101B-1,0kN ø40 for Dead Shaft Application	1,0	23	40	125	60	32	37	47	140	106	9	42.5H12	1.85	16	34
3BSE002963R0502 3BSE002963R0512	PFRL 101C-0,5kN	0,5	56	80	175	100	44	50	47	190	152	11	83.5H12	2.65	23	46
3BSE002963R1002 3BSE002963R1012	PFRL 101C-1,0kN	1,0	56	80	175	100	44	50	47	190	152	11	83.5H12	2.65	23	46
3BSE002963R0002 3BSE002963R0012	PFRL 101C-2,0kN	2,0	56	80	175	100	44	50	47	190	152	11	83.5H12	2.65	23	46
3BSE002968R0002 3BSE002968R0012	PFRL 101D-5,0kN ø110	5,0	77	110	225	130	50	56	47	240	200	14	114H13	4.15	28	52
3BSE002968R0003 3BSE002968R0013	PFRL 101D-5,0kN ø125	5,0	77	125	225	130	50	56	47	240	200	14	129H13	4.15	31	52

Bearing recommendations d = shaft diame

Self aligned ball bearing	Spherial roller bearing
2201 (d=12)	
2202 (d=15)	
2203 (d=17)	
1202 (d=15)	
1202 (d=15)	
Bearing (2203) is included in the Dead Shaft Adapte	
2203 (d=17)	
2204 (d=20)	
2205 (d=25)	22205 (d=25)
Bearing (2203) is included in the Dead Shaft Adapte	
2208 (d=40)	22208 (d=40)
2212 (d=60)	22212 (d=60)
2214 (d=70)	22214 (d=70)

× Hole in one lid 3BSE00_ _ _ _R_ _0_
Hole in two lids for through shaft 3BSE00_ _ _ _R_ _1_
×× Hole in two lids with different hole dimensions.
Units: mm

Prep.	PA/PA/FM/GF	Magnus X Lindström
Appr.	PA/FM/GF	Håkan F Wintzell
Resp.dept	PA/FM/GF	

2012-09-03
2012-09-04

Dimension drawing
Web Tension PFR100
Web Tension PFR100
Document number
3BSE004042D0003
Lang.
en

ABB AB

Product family : AK0130 Bengt Hårnes PR1100
Product type designation : PFRL101
Product information :

Project or order number :
Customer reference :
Modify date : 2012-08-28 14:33:38

We reserve all rights in this document and in the information contained therein. Reproduction, use or disclosure to third parties without express authority is strictly forbidden.
© ABB AB

D.14 Dimension Drawing, 3BSE026314, Rev. -

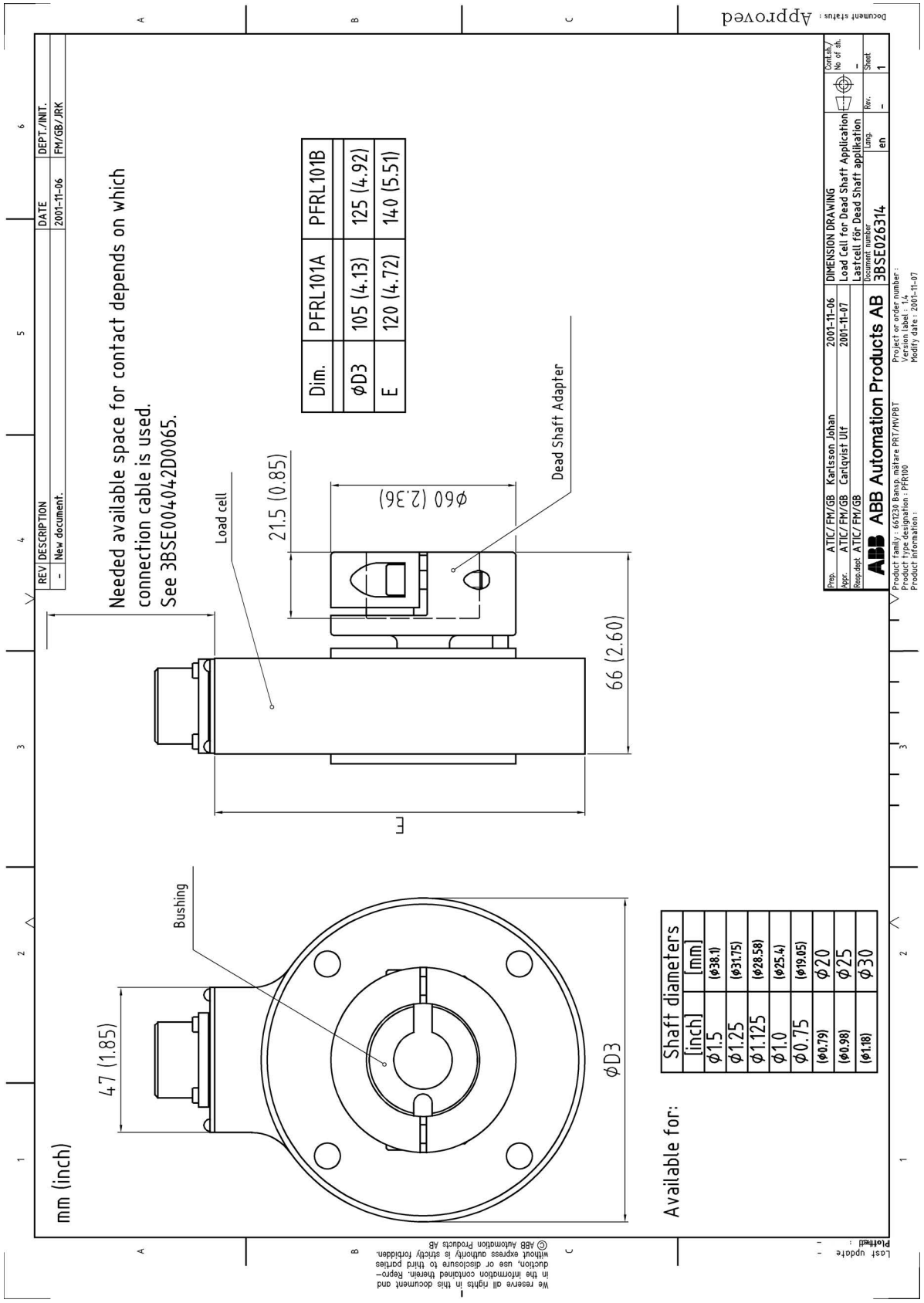

D.15 Dimension Drawing, 3BSE027249, Rev. -

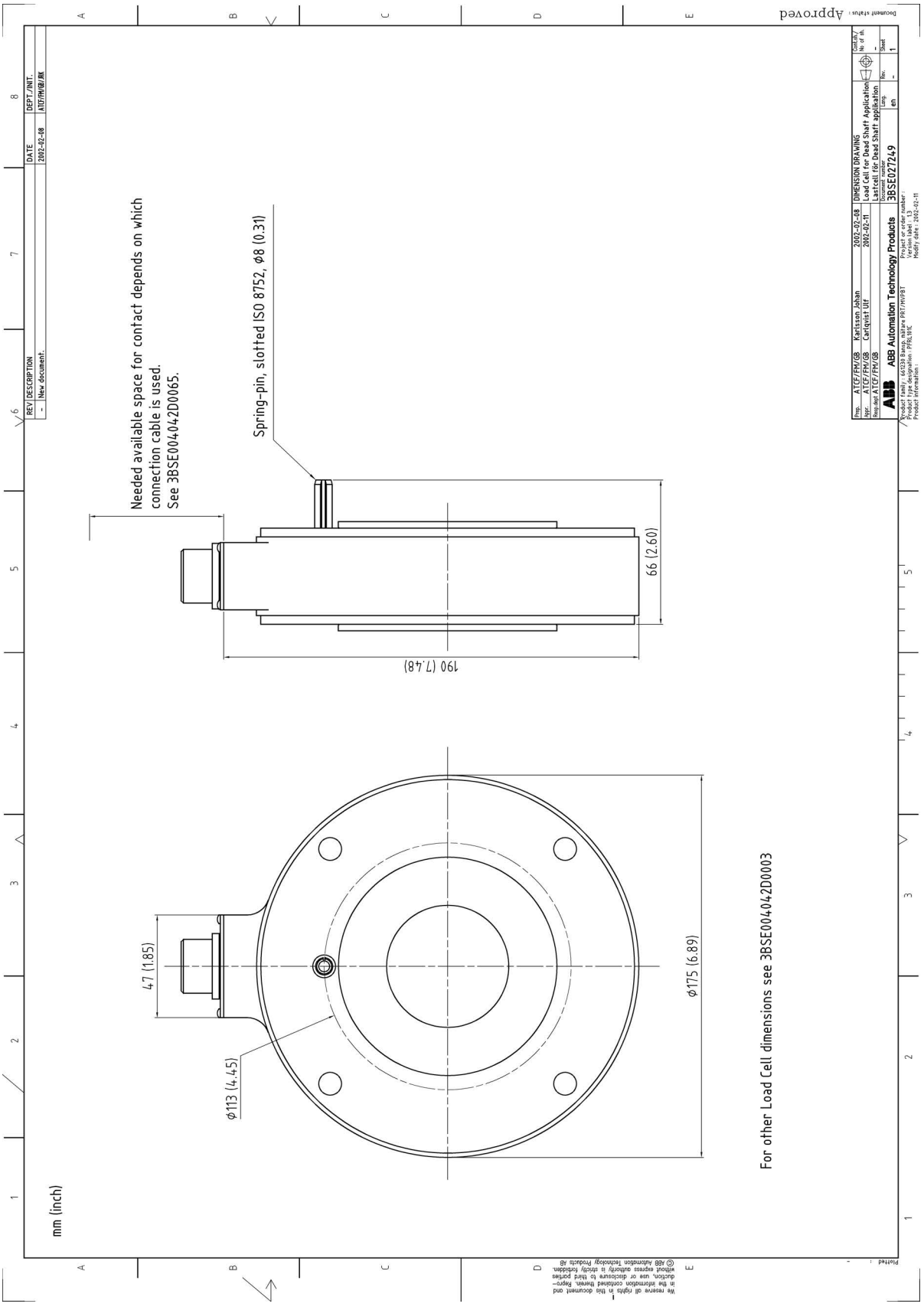

D.16 Dimension Drawing, 3BSE004042D0066, Rev. -

REV	DESCRIPTION	DATE	DEPT./INIT.
-	New document.	2001-12-13	ATCF/FM/GB/JRK

mm [inch]

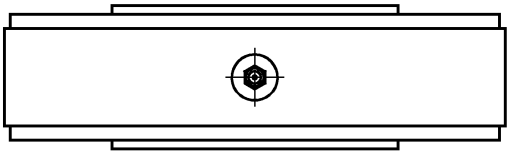

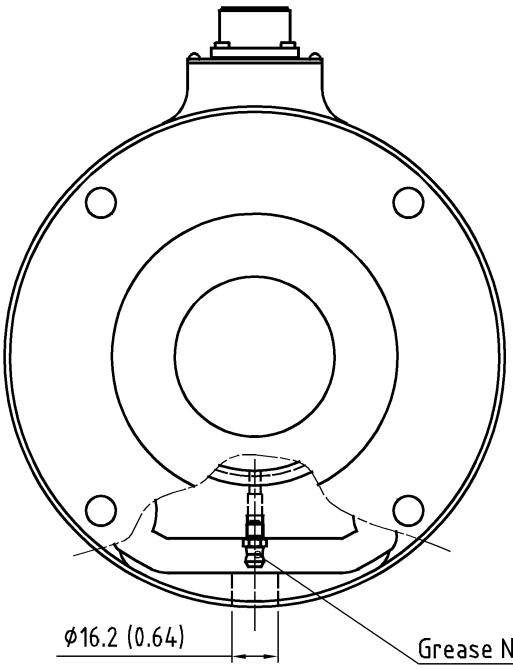

For Load Cell dimensions see: Dimension drawing 3BSE004042D0003

We reserve all rights in this document and in the information contained therein. Reproduction, use or disclosure to third parties without express authority is strictly forbidden.
© ABB Automation Technology Products AB

Prep.	ATCF/FM/GB	Karlsson Johan	2001-12-13	DIMENSION DRAWING		Cont.sh./ No of sh.
Appr.	ATCF/FM/GB	Carlqvist Ulf	2001-12-18	PRT with Grease Nipple		-
Resp.dept	ATCF/FM/GB			PRT med smörjnippel		
ABB Automation Technology Products				Document number 3BSE004042D0066	Lang. en	Rev. - / Sheet 1

Plotted : -

Document status : Approved

Product family : 661230 Bansp. mätare PRT/MVPBT
Product type designation : PFRL101
Product information :

Project or order number :
Version label : 1.3
Modify date : 2001-12-18

D.17 Dimension Drawing, 3BSE004042D0065, Rev. -

REV	DESCRIPTION	DATE	DEPT./INIT.
-	Nytt dokument	1999-06-16	SEAPR/AGB/MH

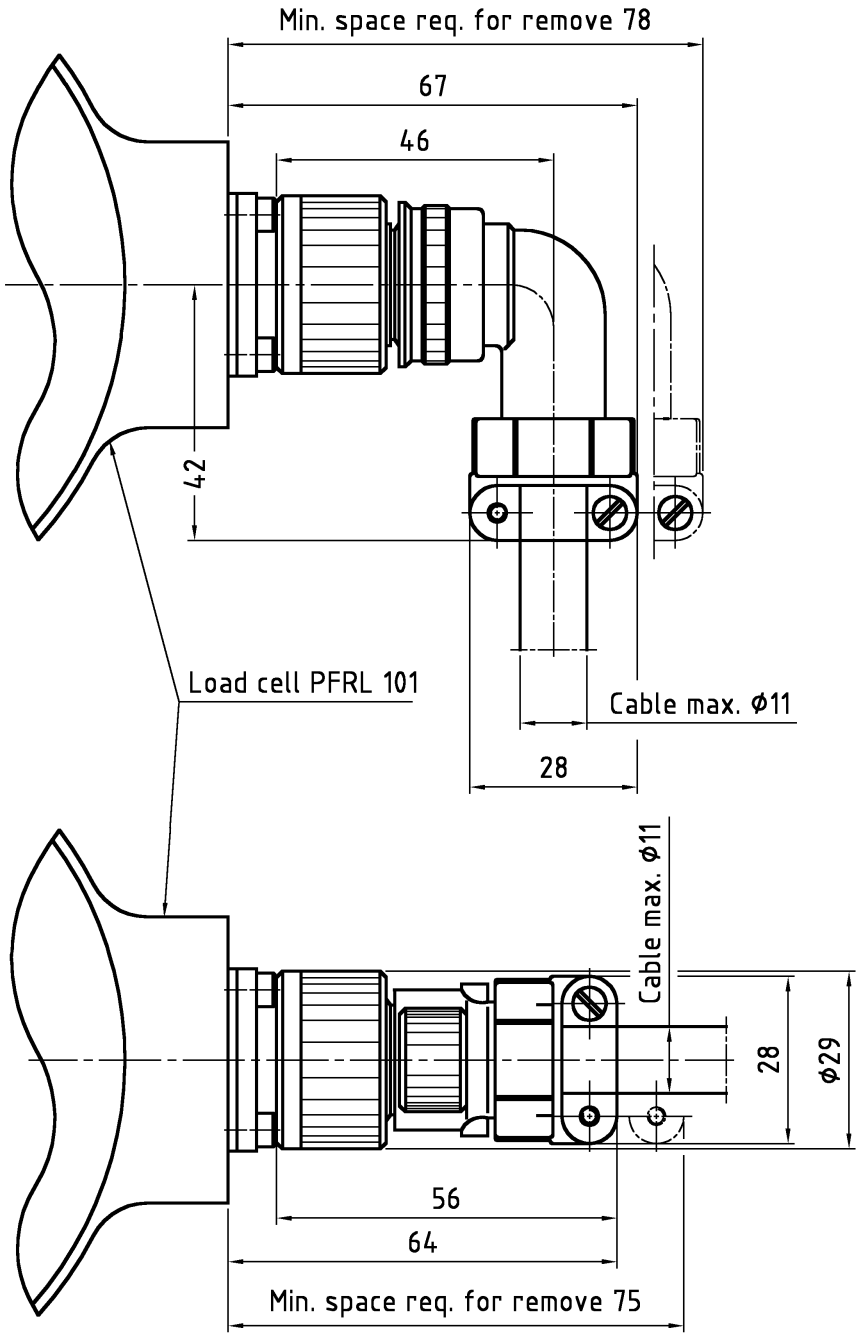

Prep.	SEAPR/AGB	Wärme Magnus SE	1999-06-16	DIMENSION DRAWING		Cont.sh./ No of sh.
Appr.	SEAPR/AGB	Carlqvist Ulf		Angular and straight plug contact PFRL 101		-
Resp.dept	SEAPR/AGB					
ABB Automation Products AB				Document number 3BSE004042D0065	Lang. en	Rev. - / Sheet 1

D.18 Dimension Drawing, 3BSE010457, Rev. B

REV	DESCRIPTION	DATE	DEPT./INIT.
-	New drawing	96-06-28	SEISY/AGK/TH
A	New material, corrosion protection and template. Updated dimensions.	2002-06-13	ATCF/FM/GB/JRK
B	CAD-format changed to SolidWorks. Material number of DIN NF BS and SS deleted.	2014-02-04	PAMP/FMGF/HG

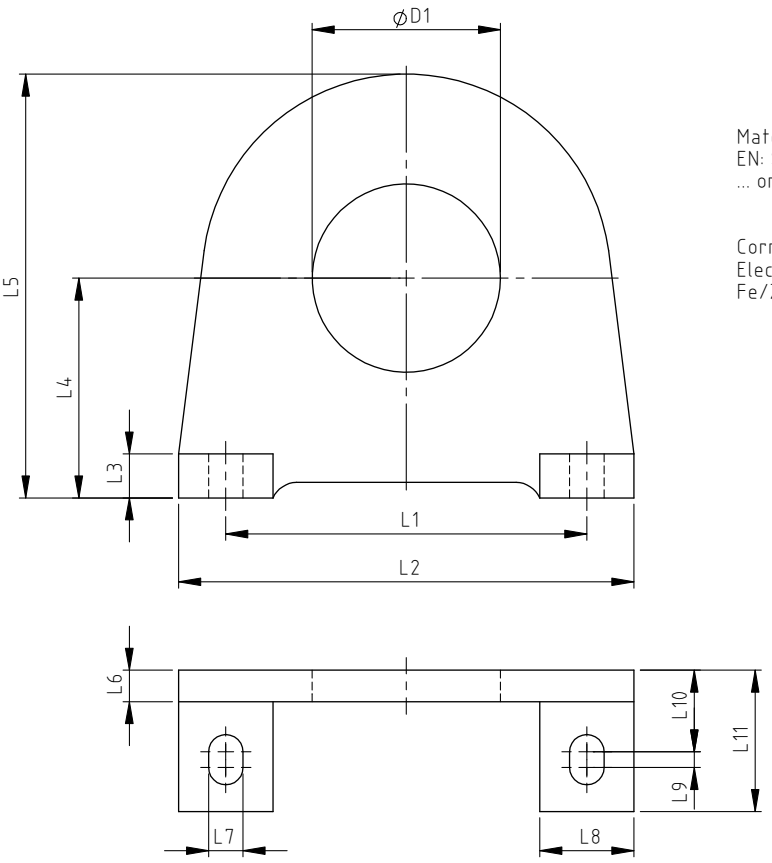

Material: B
EN: S355MC, S355 J2G3
... or equivalent steel.

Corrosion protection:
Electro-zinkplated
Fe/Zn 12C4

Art. no.	Load cell type	ØD1 H8	L1	L2	L3	L4	L5	L6	L7	L8	L9	L10	L11
3BSE003694R0001	PFRL101A PFRL101B	60	115±0,2	145	12,5	70±0,1	135	10±0,2	11	30	5	28	45
3BSE003695R0001	PFRL101C	100	195±0,2	240	22	100±0,1	190	18,5±0,2	14	45	10	40,5	65
3BSE003696R0001	PFRL101D	130	240±0,2	285	30	120±0,1	235	23,5±0,2	17,5	45	10	45,5	70

Prep.	PAMP/FMGF	Hongmei Gao	2014-02-04	Dimension drawing			Cont.sh./ No of sh.
Appr.	PAMP/FMGF	Håkan F Wintzell	2014-02-07	Bracket for PFRL101			1
Resp.dept	PAMP/FMGF			Vinkelkonsol för PFRL101			
ABB	ABB AB			Document number 3BSE010457	Lang. en	Rev. B	Sheet 1

Document status: Approved

We reserve all rights in this document and in the information contained therein. Reproduction, use or disclosure to third parties without express authority is strictly forbidden.
© ABB AB

Appendix E PFTL 101 - Designing the Load Cell Installation

E.1 About This Appendix

This appendix describes the procedure for designing the load cell installation.

The following sections are included:

- Basic application considerations
- Designing the load cell installation (step-by-step guide)
- Installation requirements
- Force and wrap gain calculation
  - Horizontal mounting
  - Inclined mounting
  - Single side measurement
- Mounting the load cells
- Technical data
- Drawings
  - Cable diagram(s)
  - Dimension drawing(s)
  - Assembly drawing(s)

E.2 Basic Application Considerations

Each application has its own individual demands that have to be considered; though a few basic considerations tend to repeat themselves.

- What type of process is involved (papermaking, converting, etc.)?
  Is the environment demanding (temperature, chemicals, etc.)?
- What is the tension measurement purpose; indication or closed loop control?
  Are there any specific accuracy demands involved?
- What is the machine design like? Is there the possibility to modify the design, in order to fit the most suitable load cell, or is the machine design fixed?
- What are the forces acting on the roll like (size and direction)?
  Can they be altered by redesign?

If these questions are dealt with thoroughly, the installation is very likely to be successful. However, the extent to which measurement accuracy is needed, defines the requirements when designing a load cell installation.

E.3 Step-by-Step Guide for Designing the Load Cell Installation

The procedure below defines the main considerations involved in designing a load cell installation.

1. Check load cell data so that environmental demands are met.
2. Calculate forces; vertical, horizontal and axial (cross directional).
3. Size and orient load cell so that the guidelines below are met:
   a. Try to achieve as large portion as possible no less than 10% of web tension, in the load cell measurement direction!
   b. Select load cell size so that it is loaded as close as possible to its nominal load! Do not dimension Force component of Tension in measuring direction, F_R, for less than 10% of the load cell nominal load!
   c. If the span between maximum and minimum tension in the process is large, select load cell so that the maximum tension will be in the load cell extended range (when applicable)!
   d. The measured force component of web tension is recommended to be at least 30% of tare force component (roll weight) acting in load cell measurement direction. The reason for this recommendation is load cell signal stability, especially when the system operates in a large temperature span.
   This means that if $F_{RT} < 1/3$ of F_{nom}, F_R should be at least 10% of F_{nom}.
   For larger F_{RT}, lowest F_R is recommended to be at least 30% of F_{RT}.

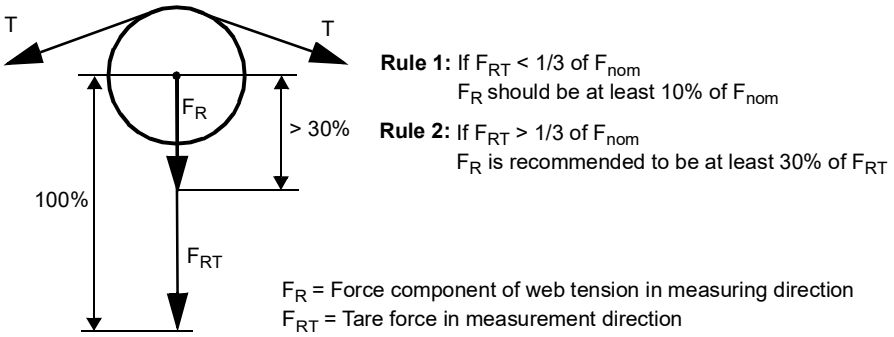

   e. Check load cell data so that limits for building height, transverse and axial forces are not exceeded.
4. Design base frame and/or adapter plates.

E.4 Installation Requirements

To achieve the specified accuracy, the best possible reliability and long-term stability, install the load cells in accordance with the requirements below.

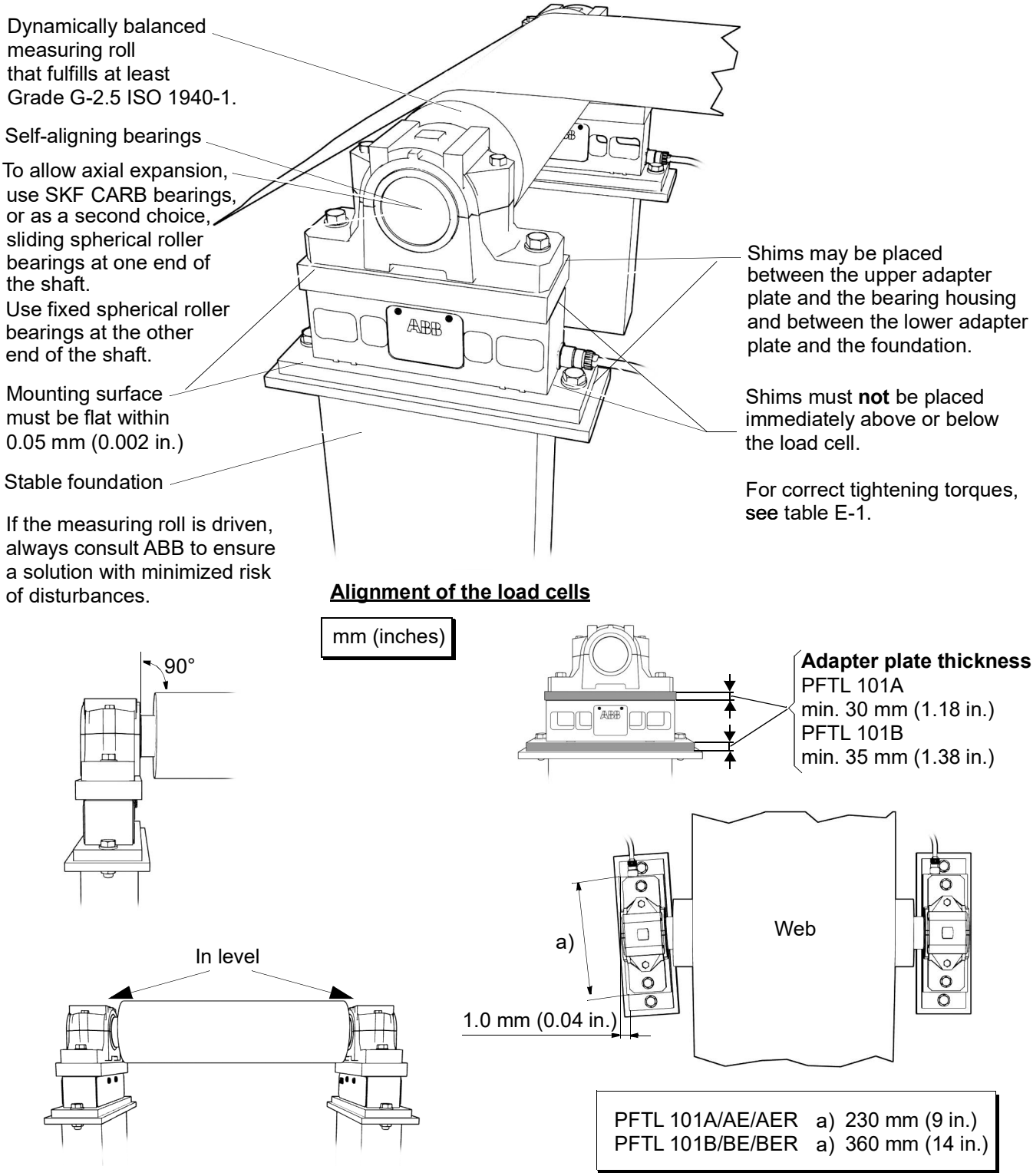

Figure E-1. Installation Requirements

E.5 Mounting Alternatives, Calculating Force and Calculating Wrap Gain

E.5.1 Horizontal Mounting

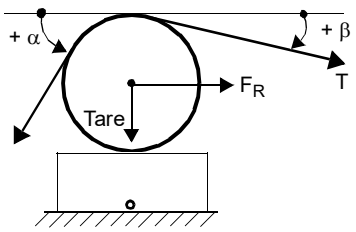

In most cases, horizontal mounting is the most obvious and simplest solution. The load cell should thus be mounted horizontally when possible.

$F_R = T \times (\cos\beta - \cos\alpha)$

$F_{RT} = 0$ (Tare force is not measured)

$F_{Rtot} = F_R + F_{RT} = T \times (\cos\beta - \cos\alpha)$

T (Tension) = Wrap gain $\times F_R$

Wrap gain $= \frac{T}{F_R} = \frac{T}{T(\cos\beta - \cos\alpha)}$

Wrap gain $= \frac{1}{\cos\beta - \cos\alpha}$

E.5.2 Inclined Mounting

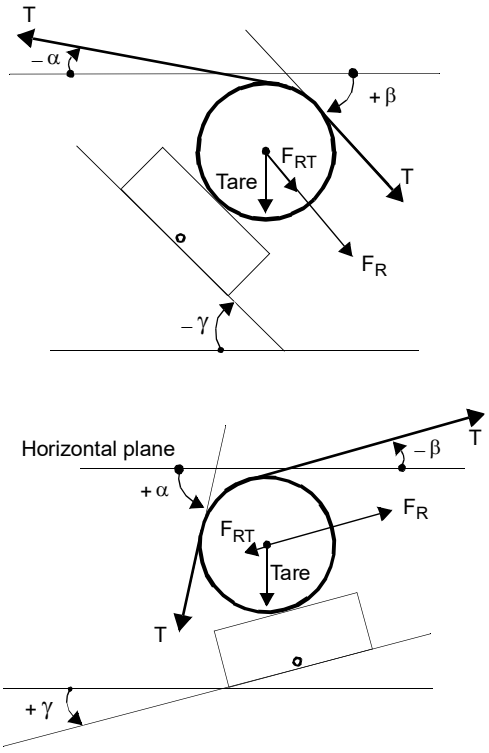

$F_R = T \times [\cos(\beta + \gamma) - \cos(\alpha - \gamma)]$

$F_{RT} = -\text{Tare} \times \sin\gamma$

$F_{Rtot} = F_R + F_{RT} =$

$T \times [\cos(\beta + \gamma) - \cos(\alpha - \gamma)] + (-\text{Tare} \times \sin\gamma)$

$T\ (\text{Tension}) = \text{Wrap gain} \times F_R$

$$\text{Wrap gain} = \frac{T}{F_R} = \frac{T}{T[\cos(\beta + \gamma) - \cos(\alpha - \gamma)]}$$

$$\text{Wrap gain} = \frac{1}{\cos(\beta + \gamma) - \cos(\alpha - \gamma)}$$

Sometimes it is necessary to mount the load cell on an incline due to mechanical design constraints of the machine or the need to have a sufficient force component applied to the load cell.

Inclined mounting adds a component of tare force in the measuring direction and modifies the force components as shown.

NOTE

When calculating, it is important that the angles are set into the equations with the correct signs in relation to the horizontal plane.

E.6 Force Calculation for Measurement with a Single Load Cell

In some cases, it is sufficient to measure the tension with only a single load cell mounted at one end of the roll. The roll should nevertheless be supported at both ends.

E.6.1 The Most Common and Simple Solution

The most obvious and simple solution is horizontal mounting with the web evenly distributed and centered on the roll.

As long as the roll is supported at both ends, the same calculations given in Section E.5, Mounting Alternatives, Calculating Force and Calculating Wrap Gain are valid.

NOTE

The accuracy of a single load cell measurement is highly dependent on how well the center of force can be determined. Since the cross-directional stress distribution generally is somewhat uneven, this is not easily done. The load cell will, however, produce a stable and repeatable measurement.

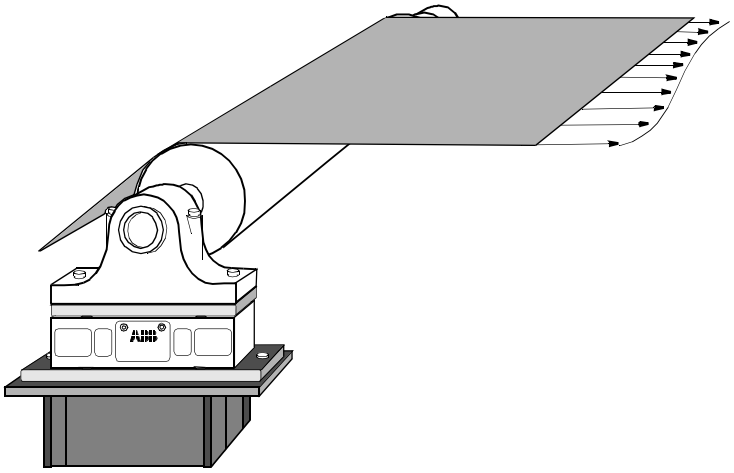

Figure E-2. Cross-directional stress distribution

E.6.2 Force Calculation when the Web is not Centered on the Roll

Use the calculations below for horizontal and inclined mounting when the web is not centered on the roll.

The applied force at the load cell will be proportional to the distance between the tension force center and the load cell centerline, see figure.

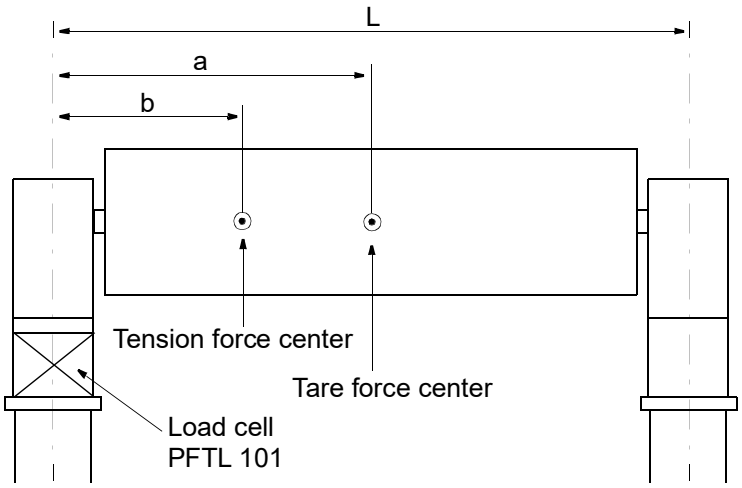

Calculation procedure:

1. Horizontal or inclined mounting?
2. Calculate F_R and F_{RT}, see Section E.5, Mounting Alternatives, Calculating Force and Calculating Wrap Gain.
3. Use the following equations:

   F_R for single load cell $= F_R \times \frac{L-b}{L}$

   F_{RT} for single load cell $= F_{RT} \times \frac{L-a}{L}$

   F_{Rtot} for single load cell = F_R for single load cell + F_{RT} for single load cell

   where:

   L = Distance between load cell centerline and the opposite bearing centerline

   a = Distance between tare force center and load cell centerline

   b = Distance between tension force center and load cell centerline

E.7 Mounting the Load Cells

The instructions below apply to a typical mounting arrangement. Variations are allowed, provided that the requirements of Section E.4, Installation Requirements are complied with.

If it is necessary to use tubular dowel pins to secure the position of the load cell, see instructions in Figure E-3.

1. Clean the foundation and other mounting surfaces.
2. Fit the lower adapter plate to the load cell.
   Tighten the screws to the torque stated in Table E-1.
3. Fit the load cell and the lower adapter plate to the foundation, but do not fully tighten the screws.
4. Fit the upper adapter plate to the load cell.
   Tighten the screws to the torque stated in Table E-1.
5. Fit the bearing housing and the roll to the upper adapter plate, but do not fully tighten the screws.

CAUTION

During this operation it is possible to overload the load cells if the operation is done not careful enough, especially if the roll is heavy. The most critical load cells are naturally the PFTL 101A-0.5 kN and PFTL 101B-2 kN. Applications with inclined mounting are most critical.

6. Adjust the load cells so that they are in parallel with each other and in line with the axial direction of the roll. Tighten the foundation screws, see Table E-1.
7. Adjust the roll so that it is at right angles to the longitudinal direction of the load cells. Tighten the screws in the upper adapter plate, see Table E-1.

Table E-1. Tightening Torques for Load Cell PFTL 101

Alternative	Type of screws	Strength class	Type of lubrication	Dimension	Tightening torque [Nm] ± 5%
1 (Recommended)	Alloyed steel screws Strength class according to ISO 898/1	12.9	Oil	M12	136 Nm
				M16	333 Nm
				M20	649 Nm
2 (Recommended)	Alloyed steel screws Strength class according to ISO 898/1	12.9	MoS_2	M12	117 Nm
				M16	286 Nm
				M20	558 Nm
3	Stainless steel (A2-80) or acid resistant steel (A4-80), Strength class according to ISO 3506	A2-80 or A4-80	Wax	M12	76 Nm
				M16	187 Nm
				M20	364 Nm
4	Stainless steel (A2-80) or acid resistant steel (A4-80), Strength class according to ISO 3506	A2-80 or A4-80	Oil or emulsion	M12	65 Nm
				M16	161 Nm
				M20	313 Nm

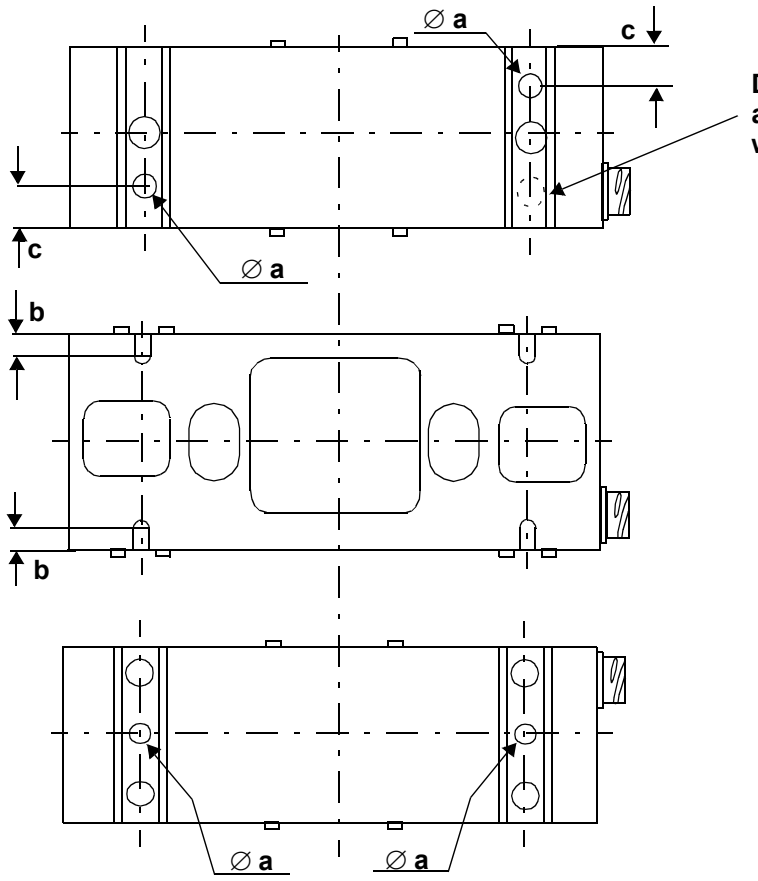

Load cell PFTL 101	∅ a	b	c	Tubular dowel pin
A/AE/AER	8	15	15	∅ 8.4
B/BE/BER	12	15	20	∅ 12.5

Figure E-3. Drilling Dowel Pin Holes

E.7.1 Routing the Load Cell Cable

The cable must be supported with clamps and routed to prevent force shunting through the cable.

E.8 Technical Data

Table E-2. Technical Data for Different Types of Load Cell PFTL 101

PFTL 101	Type	Data						Unit
Nominal load								
Nominal load in measuring direction, F_{nom}	A/AE/AER	0.5 (112)	1.0 (225)	2.0 (450)				kN (lbs)
	B/BE/BER			2.0 (450)	5.0 (1120)	10.0 (2250)	20.0 (4500)	
Permitted transverse load within the accuracy, F_{Vnom}	A/AE/AER	5 (1120)	10 (2250)	10 (2250)				
	B/BE/BER			30 (6740)	30 (6740)	30 (6740)	40 (9000)	
Permitted axial load within the accuracy, F_{Anom}	A/AE/AER	2 (450)	5 (1120)	5 (1120)				
	B/BE/BER			5 (1120)	10 (2250)	10 (2250)	10 (2250)	
Overload capacity								
Max. load in measuring direction without permanent change of data, F_{max}	A/AE/AER	2.5 (562)	5 (1120)	10 (2250)				
	B/BE/BER			10 (2250)	25 (5620)	50 (11200)	80 (18000)	
Spring constant	A/AE/AER	32 (183)	65 (372)	130 (744)				kN/mm (1000 lbs/in.)
	B/BE/BER			130 (744)	325 (1860)	650 (3718)	1300 (7440)	
Mechanical data								
Length	A/AE/AER	230 (9)	230 (9)	230 (9)				mm (inch)
	B/BE/BER			360 (14)	360 (14)	360 (14)	360 (14)	
Width	A/AE/AER	84 (3.3)	84 (3.3)	84 (3.3)				
	B/BE/BER			104 (4)	104 (4)	104 (4)	104 (4)	
Height	A/AE/AER	125 (5)	125 (5)	125 (5)				
	B/BE/BER			125 (5)	125 (5)	125 (5)	125 (5)	

Table E-2. Technical Data for Different Types of Load Cell PFTL 101

PFTL 101	Type	Data						Unit
Weight	A/AE/AER	9 (20)	9 (20)	10 (22)				kg (lbs)
	B/BE/BER			20 (44)	21 (46)	21 (46)	23 (51)	
Material	A/AE/B/BE	Stainless steel: SS 2383 DIN 17440 X12CrMoS17 Werkstoffnr 1.4104 AISI 430F						
	AER/BER	Acid resistant steel: SS 2348 DIN 17440 X2CrNiMo17 13 2 Werkstoffnr 1.4404 AISI 316L						
Accuracy	A/AE/AER B/BE/BER							
Accuracy class		± 0.5						%
Linearity deviation		± 0.3						
Repeatability error		< ± 0.05						
Hysteresis		<0.2						
Compensated temperature range		+20 - +80 (68 - 176)						°C (°F)
Zero point drift		30 / 80(1) (17 / 44(1))						ppm/K (ppm/F)
Sensitivity drift		150 (83)						
Working temperature range		–10 - +105 (14 - 221)						°C (°F)
Zero point drift		50 / 100(1) / (28 / 56(1))						ppm/K (ppm/F)
Sensitivity drift		250 (139)						
Storage temperature range		–40 - +105 (–40 - +105)						°C (°F)
Degree of protection	A/B AE/BE AER/BER	IP 65 IP 66 IP 66/67	According. to EN 60 529					

(1) PFTL 101AER -0.5 kN/ -1.0 kN

E.9 Cable Diagram 3BSE028140D0065, Page 3/5, Rev. D

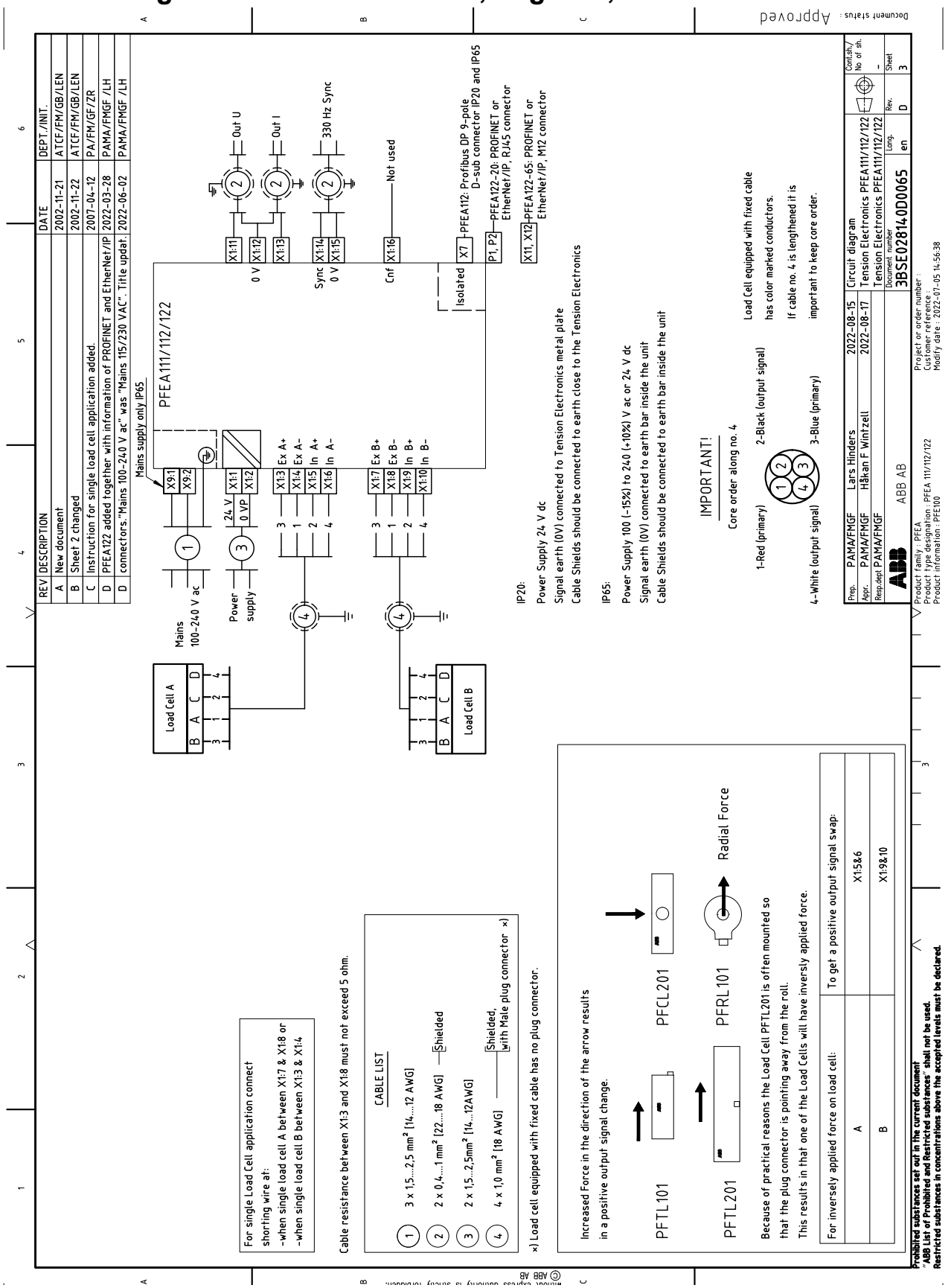

E.10 Cable Diagram 3BSE028140D0065, Page 4/5, Rev. D

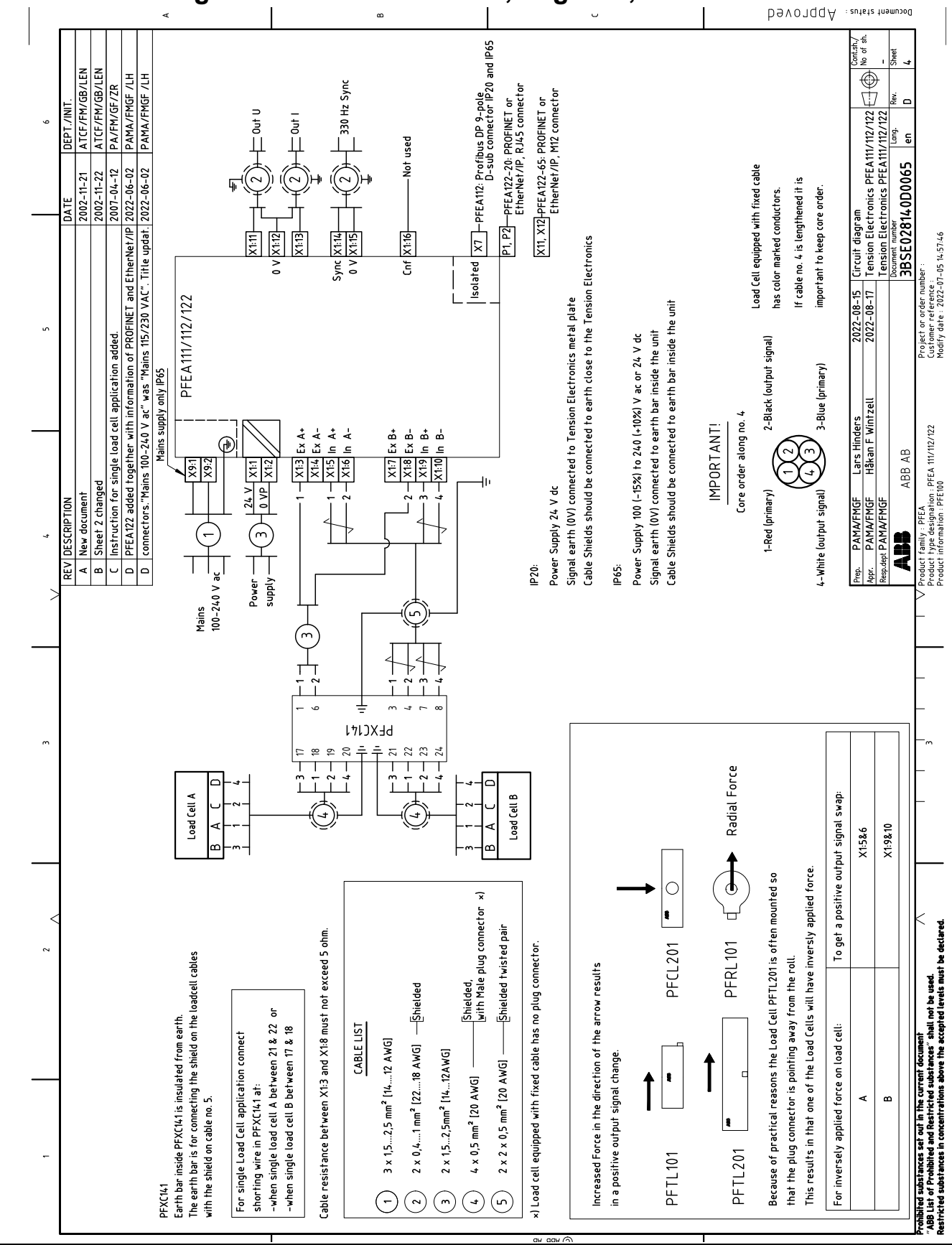

E.11 Cable Diagram 3BSE028140D0065, Page 5/5, Rev. D

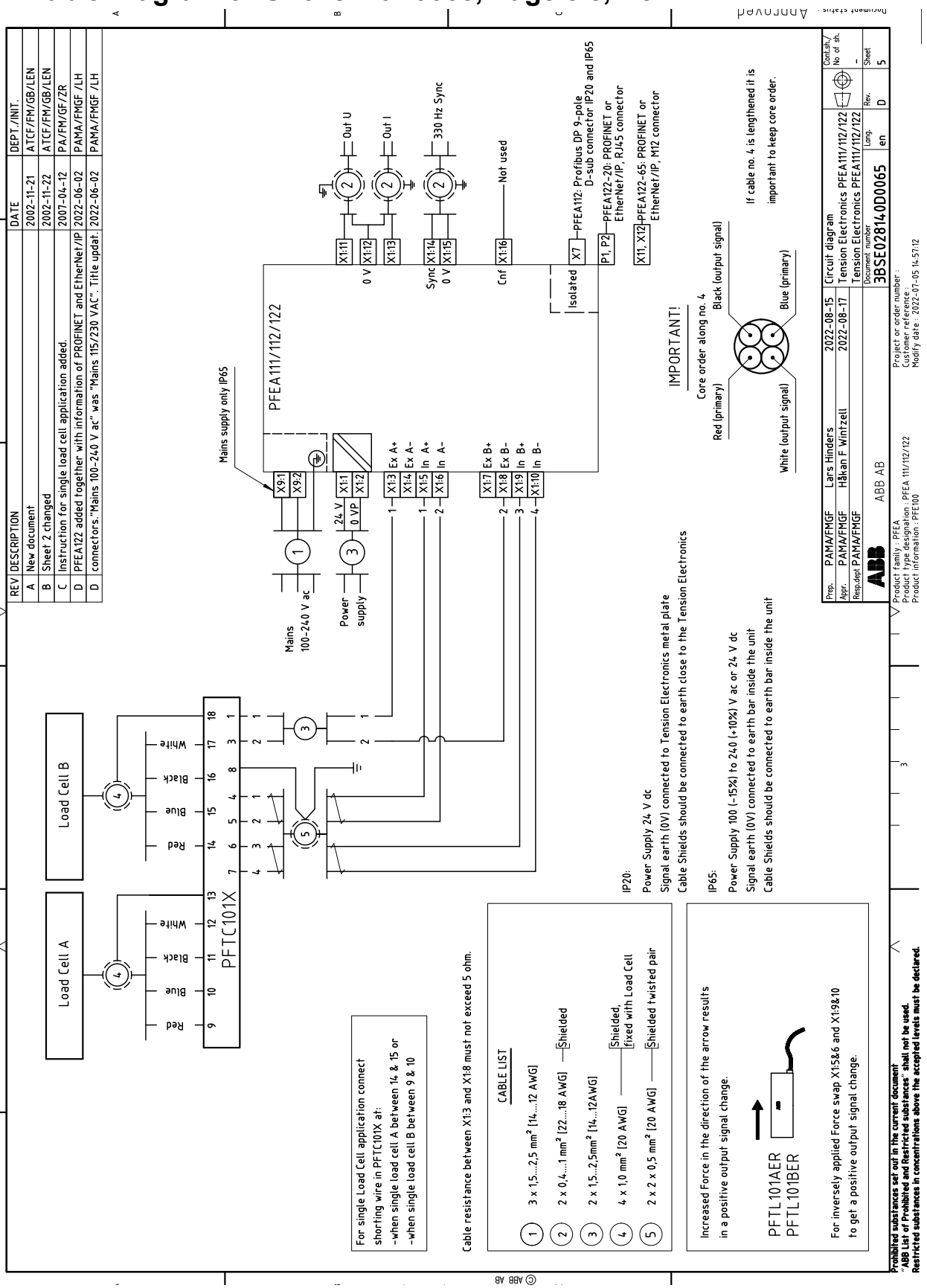

E.12 Dimension Drawing, 3BSE004171, Rev. B

REV	DESCRIPTION	DATE	DEPT./INIT.
-	New document	93-07-07	SEAUT/AGK/RoK
A	Tolerance and text add.	94-10-18	SEISY/AGK/ÅP
B	Connector moved. Text (Neg. signal) and (Pos. signal) added.	2002-01-08	ATCF/FM/GB/LEN

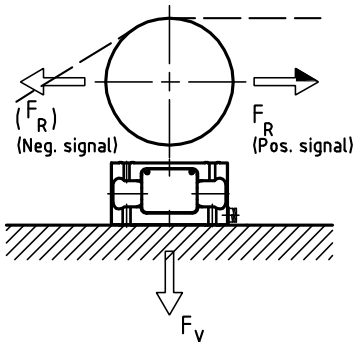

F_R = Measured component

F_V = Force component (not measured)

Drawing shows PFTL 101A-1.0kN
Dimensions are valid for the following load cells:

PFTL 101A-0.5kN Art No.:3BSE004160R0001
PFTL 101A-1.0kN Art No.:3BSE004166R0001
PFTL 101A-2.0kN Art No.:3BSE004172R0001

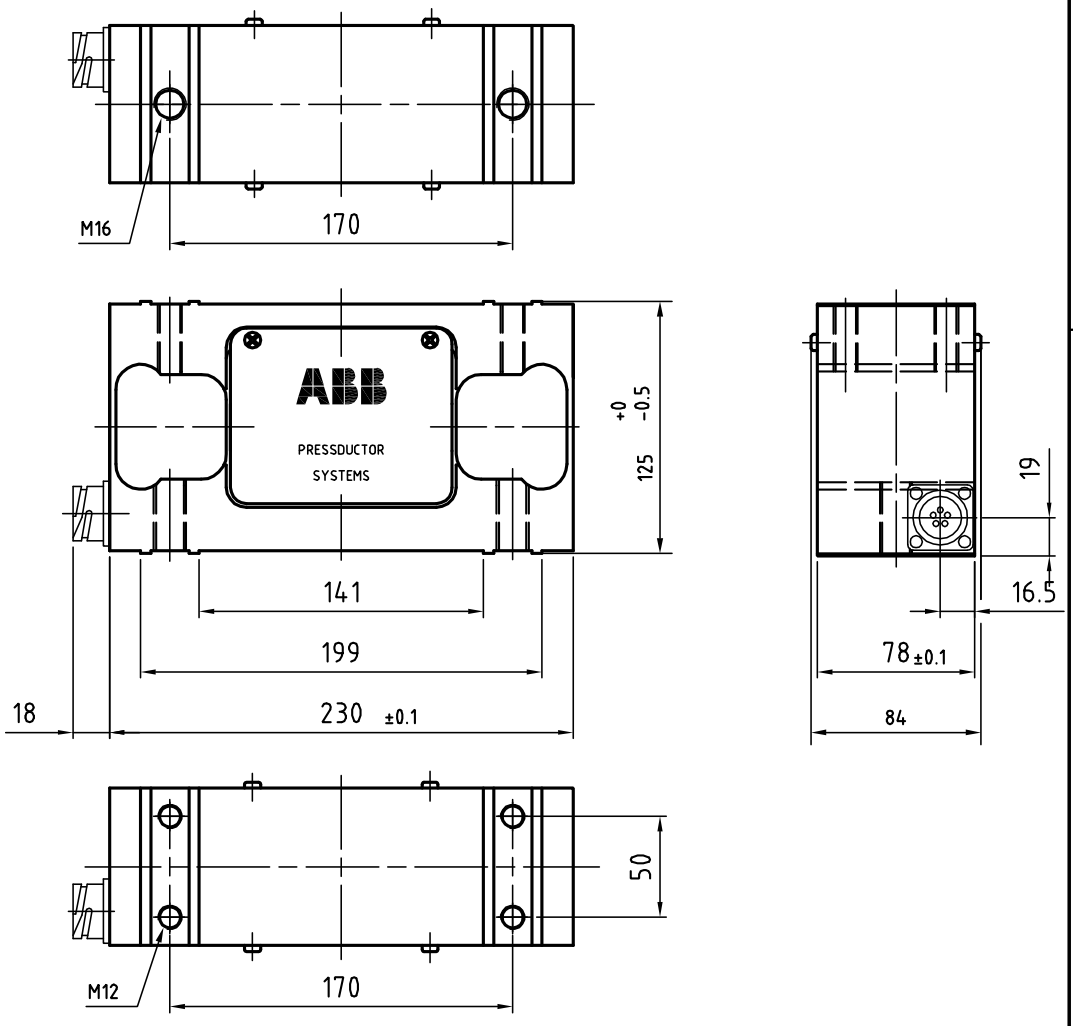

Prep.	ATCF/FM/GB	Nilsson Lars-Erik	2002-01-08	DIMENSION DRAWING			Cont.sh./ No of sh.
Appr.	ATCF/FM/GB	Carlqvist Ulf	2002-01-29	PFTL 101A-0.5-2.0kN			-
Resp.dept	ATCF/FM/GB			Load cell			
Plotted	ABB Automation Technology Products			Document number 3BSE004171	Lang. en	Rev. B	Sheet 1

E.13 Dimension Drawing, 3BSE004995, Rev. C

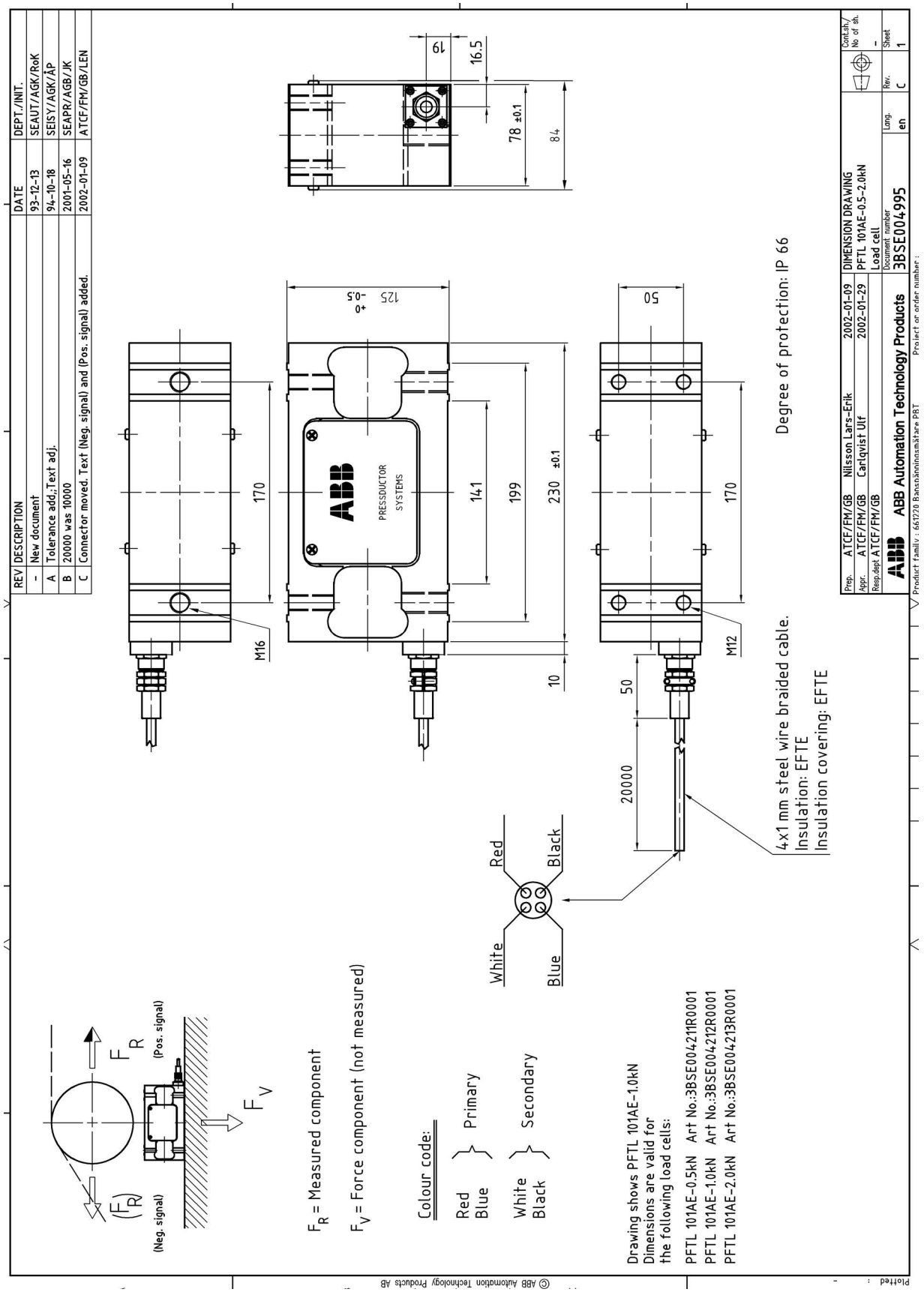

E.14 Dimension Drawing, 3BSE023301D0064, Rev. B

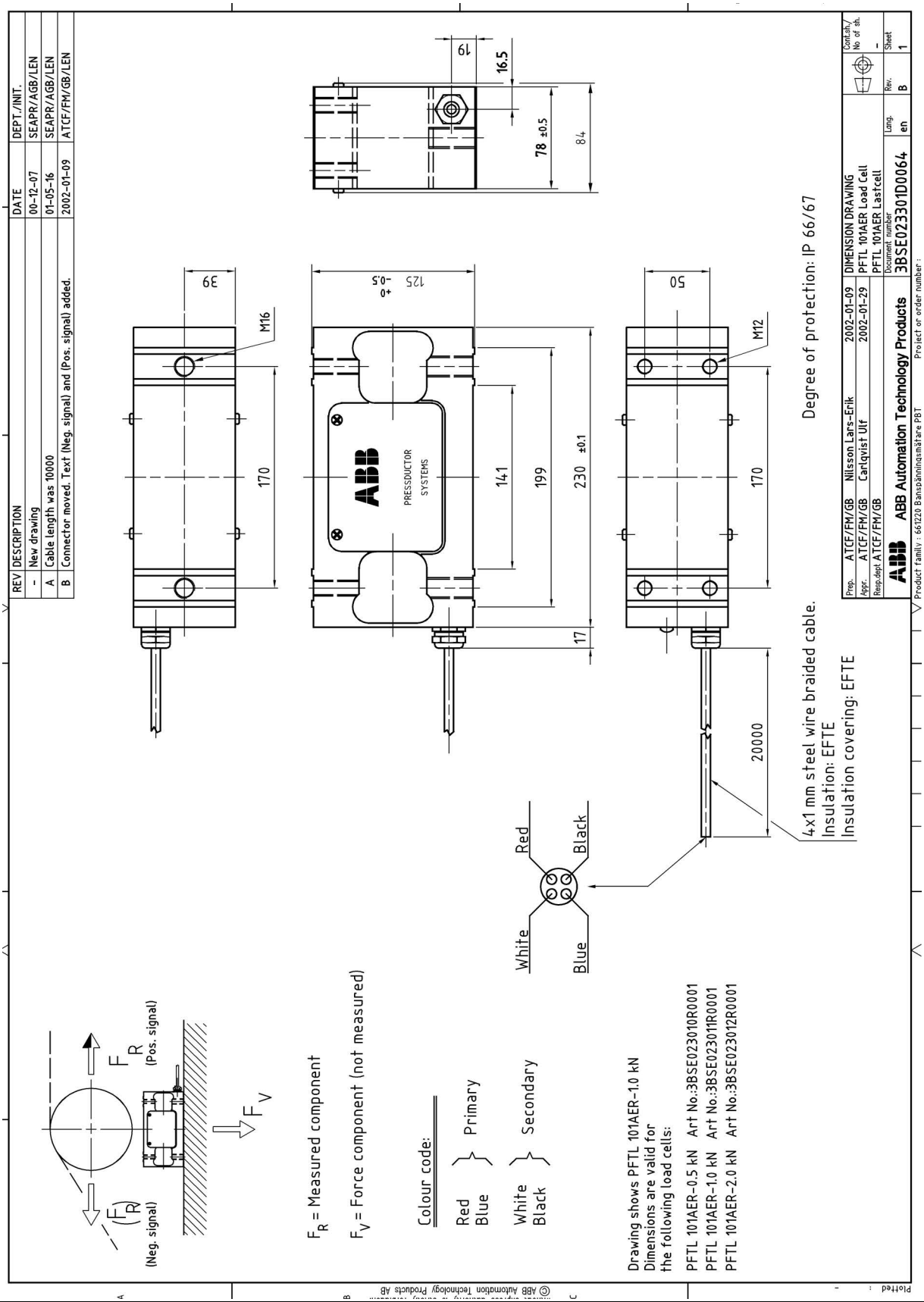

E.15 Dimension Drawing, 3BSE004196, Rev. C

REV	DESCRIPTION	DATE	DEPT./INIT.
–	New document	93-07-11	SEAUT/AGK/RoK
A	Tolerance and text add.	94-10-18	SEISY/AGK/ÅP
B	Art.No. 3BSE004197R0001 var 3BSE004177R0001	95-08-04	SEISY/AGK/ÅP
C	Connector moved. Text (Neg. signal) and (Pos. signal) added.	2002-01-08	ATCF/FM/GB/LEN

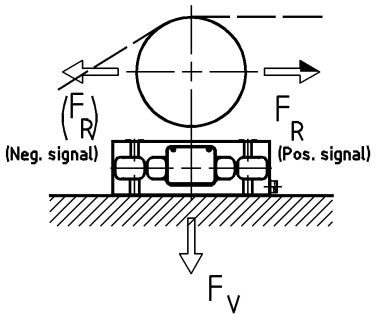

F_R = Measured component

F_V = Force component (not measured)

Drawing shows PFTL 101B-5.0kN
Dimensions are valid for the following load cells:

PFTL 101B-2.0kN Art No.:3BSE004185R0001
PFTL 101B-5.0kN Art No.:3BSE004191R0001
PFTL 101B-10.0kN Art No.:3BSE004197R0001
PFTL 101B-20.0kN Art.No.:3BSE004203R0001

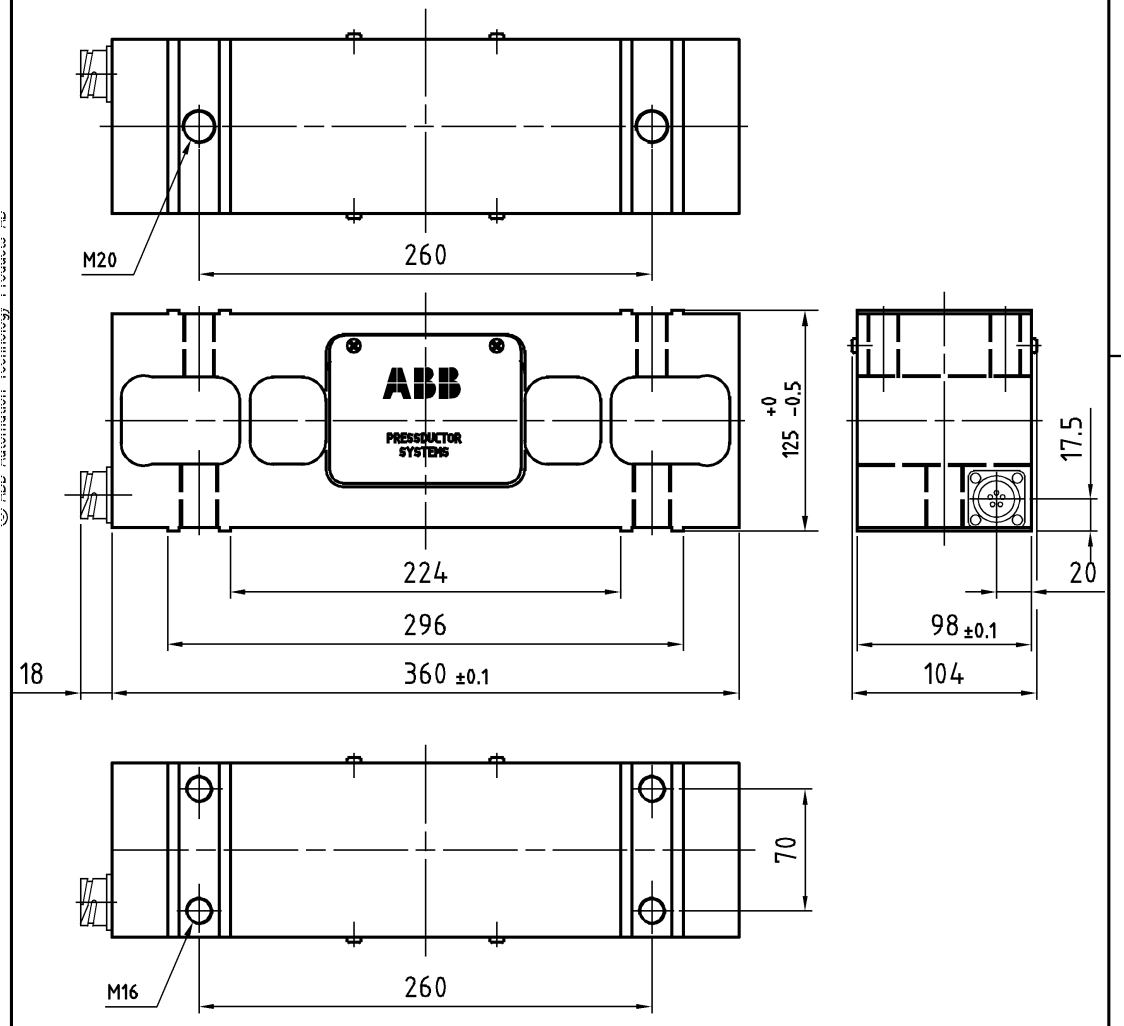

Prep.	ATCF/FM/GB	Nilsson Lars-Erik	2002-01-09	DIMENSION DRAWING			Cont.sh./ No of sh.
Appr.	ATCF/FM/GB	Carlqvist Ulf	2002-01-29	PFTL 101B-2.0-20.0kN			–
Resp.dept	ATCF/FM/GB			Load cell			
ABB Automation Technology Products				Document number 3BSE004196	Lang. en	Rev. C	Sheet 1

E.16 Dimension Drawing, 3BSE004999, Rev. C

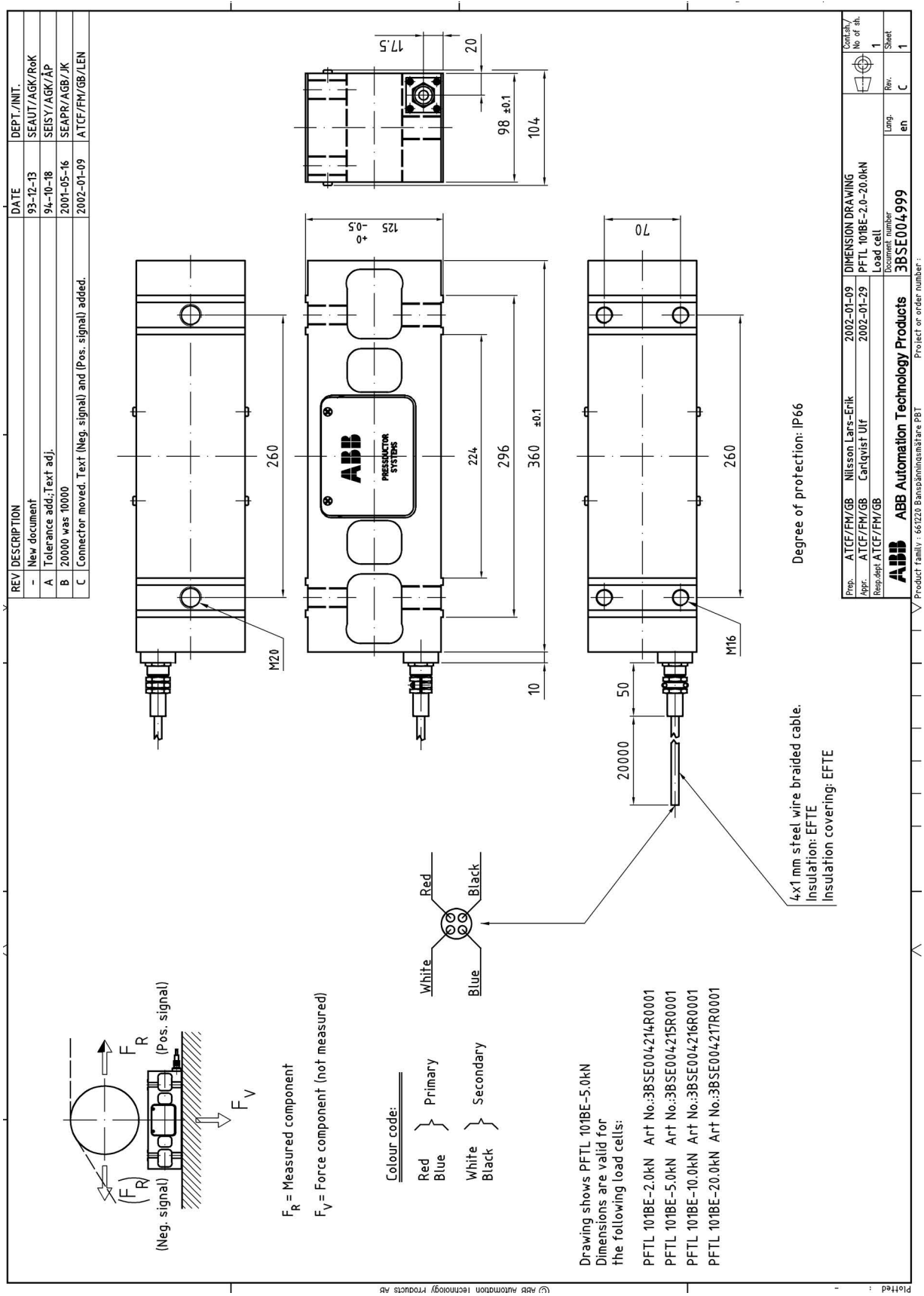

E.17 Dimension Drawing, 3BSE023223D0064, Rev. B

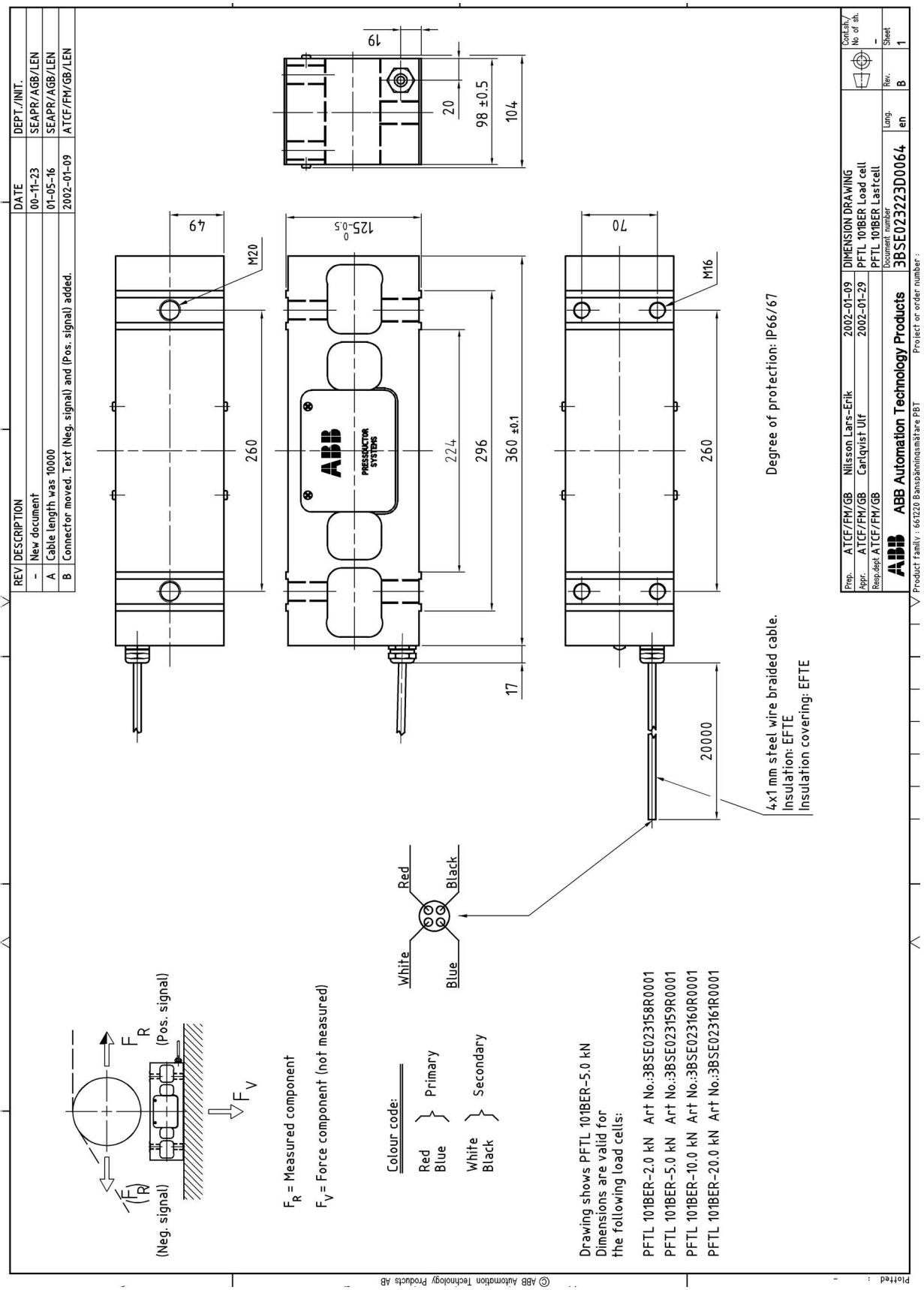

E.18 Dimension Drawing, 3BSE012173, Rev. F

REV	DESCRIPTION	DATE	DEPT./INIT.
-	New drawing	97-02-28	SEISY/AGK/ÅP
A	Yield strenght was 250 N/mm^2	97-06-11	SEISY/AGK/ÅP
B	Title block updated	00-10-10	SEAPR/AGB/JK
C	PFTL 101AER added to Material table	01-02-21	SEAPR/AGB/LEN
D	Redrawn , Material table moved to 3BSE030638D3101	2009-04-23	PA/FM/GF/JK
E	Table Technical materials added.	2012-12-07	PA/FM/GF/ML
E	Doc. title Lower adpt. plate for PFTL101A/AE was	2012-12-07	PA/FM/GF/ML
E	Lower adapter plate for PFTL 101 A.	2012-12-07	PA/FM/GF/ML
F	Technical materials table adjusted. Doc. title adjusted.	2013-06-10	PAMP/FMGF/ML

Technical materials

Loadcell	Material description	Material specification	Material designation
PFTL101A/AE	Steel, through hardened	Hardness 300-400HB, Yield stress>500MPa(N/mm^2), CTE 11- 13 µm/m/°C. Remanent magnetism of the finished detail must be less than 2 Gauss(0-0,2mT)	34CrNiMo6+QT900, Toolox 33, Toolox 44, W.nr. 1.6582 +QT900, ASTM 4340 or equivalent
	Martensitic Stainless Steel	Hardness 300-400HB, Yield stress>400MPa(N/mm^2), CTE 10 - 13 µm/m/°C. Remanent magnetism of the finished detail must be less than 2 Gauss(0-0,2mT)	X12CrMoS13+AT, X20Cr13 +AT, W.nr.1.4005 +AT, W.nr 1.4021 +AT, ASTM 416, 420 or equivalent
PFTL101AER	Austenitic Stainless Steel.	Hardness 150-350HB, Yield stress>220MPa(N/mm^2), CTE 16- 18 µm/m/°C. Remanent magnetism of the finished detail must be less than 2 Gauss(0-0,2mT)	X2CrNiMo17-12-2 +AT X5CrNi18-10+AT, W.nr.1.4301+AT, W.nr.1.4404 +AT ASTM 313, 314 or equivalent.

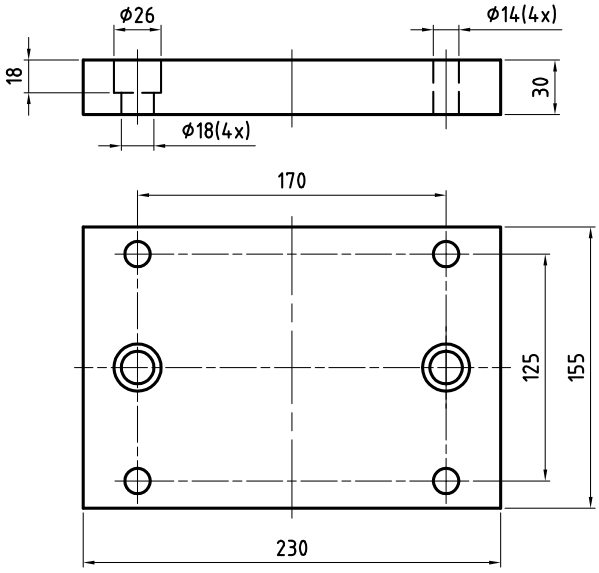

Manufacturing drawing : 3BSE030638D3101 Mass(weight) : App 8 kg

Prep.	PA/FMGF	Magnus X Lindström	2013-06-10	Dimension drawing		Cont.sh./ No of sh.
Appr.	PA/FMGF	Håkan F Wintzell	2013-06-14	Lower adpt. plate PFTL101A/AE/AER		-
Resp.dept	PA/FMGF			Und. adpt. platta PFTL101A/AE/AER		
ABB	ABB AB			Document number 3BSE012173	Lang. en	Rev. F / Sheet 1

Document status : Approved

We reserve all rights in this document and in the information contained therein. Reproduction, use or disclosure to third parties without express authority is strictly forbidden.
© ABB AB

E.19 Dimension Drawing, 3BSE012172, Rev. F

REV	DESCRIPTION	DATE	DEPT./INIT.
-	New drawing	97-02-28	SEISY/AGK/ÅP
A	Yield strength was 250 N/mm	97-06-11	SEISY/AGK/ÅP
B	Title block updated	00-10-10	SEAPR/AGB/JK
C	PFTL 101AER added to Material table	01-02-21	SEAPR/AGB/LEN
D	Redrawn , Material table moved to 3BSE030638D3100	2009-04-22	PA/FM/GF/JK
E	Table Technical materials added.	2012-12-07	PA/FM/GF/ML
E	Doc. title Top adpt. plate for PFTL101A/AE was	2012-12-07	PA/FM/GF/ML
E	Top adapter plate for PFTL 101 A.	2012-12-07	PA/FM/GF/ML
F	Technical materials table adjusted. Doc. title adjusted.	2013-06-10	PAMP/FMGF/ML

Technical materials

Loadcell	Material description	Material specification	Material designation
PFTL101A/AE	Steel, through hardened	Hardness 300-400HB, Yield stress>500MPa(N/mm²), CTE 11- 13 µm/m/°C. Remanent magnetism of the finished detail must be less than 2 Gauss(0-0,2mT)	34CrNiMo6+QT900, Toolox 33, Toolox 44, W.nr. 1.6582 +QT900, ASTM 4340 or equivalent
	Martensitic Stainless Steel	Hardness 300-400HB, Yield stress>400MPa(N/mm²), CTE 10 - 13 µm/m/°C. Remanent magnetism of the finished detail must be less than 2 Gauss(0-0,2mT)	X12CrMoS13+AT, X20Cr13 +AT, W.nr.1.4005 +AT, W.nr 1.4021 +AT, ASTM 416, 420 or equivalent
PFTL101AER	Austenitic Stainless Steel.	Hardness 150-350HB, Yield stress>220MPa(N/mm²), CTE 16- 18 µm/m/°C. Remanent magnetism of the finished detail must be less than 2 Gauss(0-0,2mT)	X2CrNiMo17-12-2 +AT X5CrNi18-10+AT, W.nr.1.4301+AT, W.nr.1.4404 +AT ASTM 313, 314 or equivalent.

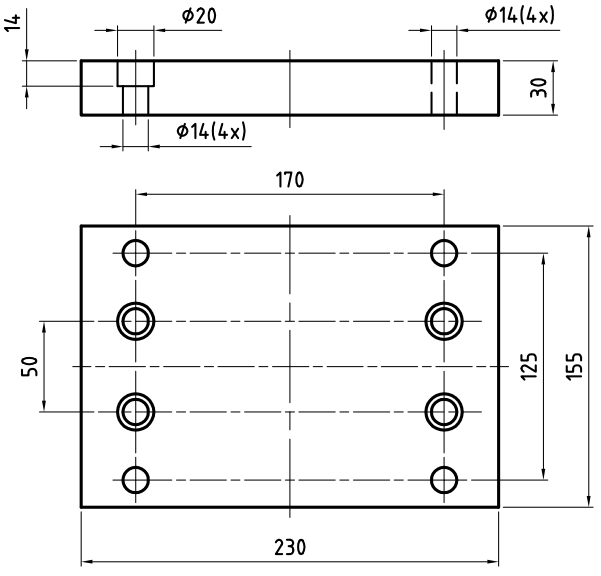

Manufacturing drawing: 3BSE030638D3100 Mass(weight) : App 8 kg

Prep.	PA/FMGF	Magnus X Lindström	2013-06-13	Dimension drawing			Cont.sh./ No of sh.
Appr.	PA/FMGF	Håkan F Wintzell	2013-06-14	Top adpt. plate PFTL101A/AE/AER			-
Resp.dept	PA/FMGF			Övr. adpt. platta PFTL101A/AE/AER			
ABB	ABB AB			Document number 3BSE012172	Lang. en	Rev. F	Sheet 1

Document status : Approved

We reserve all rights in this document and in the information contained therein. Reproduction, use or disclosure to third parties without express authority is strictly forbidden.
© ABB AB

E.20 Dimension Drawing, 3BSE012171, Rev. F

REV	DESCRIPTION	DATE	DEPT./INIT.
-	New drawing	97-02-28	SEISY/AGK/ÅP
A	Yield strength was 250N/mm^2	97-06-11	SEISY/AGK/ÅP
B	Title block updated	00-10-10	SEAPR/AGB/JK
C	PFTL 101BER added to Material table	01-02-21	SEAPR/AGB/LEN
D	Changed to all english version . Redrawn	2009-04-22	PA/FM/GF/JK
E	Table Technical materials added.	2012-12-07	PA/FM/GF/ML
E	Doc. title Lower adpt. plate for PFTL101B/BE was	2012-12-07	PA/FM/GF/ML
E	Lower adapter plate for PFTL 101 B.	2012-12-07	PA/FM/GF/ML
F	Technical materials table adjusted. Doc title adjusted.	2013-06-10	PAMP/FMGF/ML

Technical materials

Loadcell	Material description	Material specification	Material designation
PFTL101B/BE	Steel, through hardened	Hardness 300-400HB, Yield stress>500MPa(N/mm^2), CTE 11- 13 µm/m/°C. Remanent magnetism of the finished detail must be less than 2 Gauss(0-0,2mT)	34CrNiMo6+QT900, Toolox 33, Toolox 44, W.nr. 1.6582 +QT900, ASTM 4340 or equivalent
	Martensitic Stainless Steel	Hardness 300-400HB, Yield stress>400MPa(N/mm^2), CTE 10 - 13 µm/m/°C. Remanent magnetism of the finished detail must be less than 2 Gauss(0-0,2mT)	X12CrMoS13+AT, X20Cr13 +AT, W.nr.1.4005 +AT, W.nr 1.4021 +AT, ASTM 416, 420 or equivalent
PFTL101BER	Austenitic Stainless Steel.	Hardness 150-350HB, Yield stress>220MPa(N/mm^2), CTE 16- 18 µm/m/°C. Remanent magnetism of the finished detail must be less than 2 Gauss(0-0,2mT)	X2CrNiMo17-12-2 +AT X5CrNi18-10+AT, W.nr.1.4301+AT, W.nr.1.4404 +AT ASTM 313, 314 or equivalent.

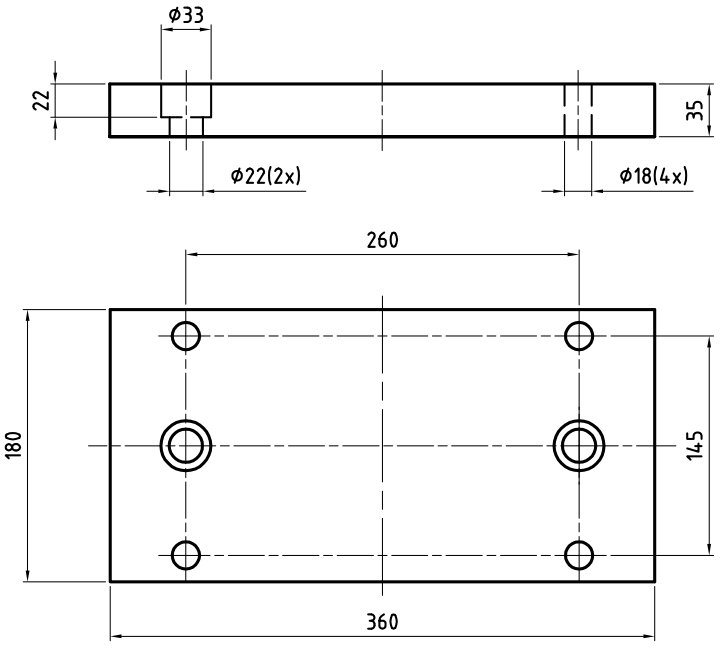

Manufacturing drawing : 3BSE030638D3201 Weight: 18 kg

Prep.	PA/FMGF	Magnus X Lindström	2013-06-10	Dimension drawing			Cont.sh./ No of sh.
Appr.	PA/FMGF	Håkan F Wintzell	2013-06-14	Low. adpt. plate PFTL101B/BE/BER			
Resp.dept	PA/FMGF			Und. adpt. platta PFTL101B/BE/BER			-
ABB	ABB AB			Document number 3BSE012171	Lang. en	Rev. F	Sheet 1

Document status : Approved

We reserve all rights in this document and in the information contained therein. Reproduction, use or disclosure to third parties without express authority is strictly forbidden. © ABB AB

E.21 Dimension Drawing, 3BSE012170, Rev. F

REV	DESCRIPTION	DATE	DEPT./INIT.
-	New drawing	97-02-28	SEISY/AGK/ÅP
A	Yield strength was 250 N/mm^2	97-06-11	SEISY/AGK/ÅP
B	Title block updated	00-10-10	SEAPR/AGB/JK
C	PFTL 101BER added to Material table	01-02-21	SEAPR/AGB/LEN
D	Changed to all english version ; redrawn.	2009-04-23	PA/FM/GF/JK
E	Table Technical materials added.	2012-12-07	PA/FM/GF/ML
E	Doc. title Top adpt. plate for PFTL101B/BE was	2012-12-07	PA/FM/GF/ML
E	Top adapter plate for PFTL 101 B.	2012-12-07	PA/FM/GF/ML
F	Technical materials table adjusted. Doc. title adjusted.	2013-06-10	PAMP/FMGF/ML

Technical materials

Loadcell	Material description	Material specification	Material designation
PFTL101B/BE	Steel, through hardened	Hardness 300-400HB, Yield stress>500MPa(N/mm^2), CTE 11- 13 µm/m/°C. Remanent magnetism of the finished detail must be less than 2 Gauss(0-0,2mT)	34CrNiMo6+QT900, Toolox 33, Toolox 44, W.nr. 1.6582 +QT900, ASTM 4340 or equivalent
	Martensitic Stainless Steel	Hardness 300-400HB, Yield stress>400MPa(N/mm^2), CTE 10 - 13 µm/m/°C. Remanent magnetism of the finished detail must be less than 2 Gauss(0-0,2mT)	X12CrMoS13+AT, X20Cr13 +AT, W.nr.1.4005 +AT, W.nr 1.4021 +AT, ASTM 416, 420 or equivalent
PFTL101BER	Austenitic Stainless Steel.	Hardness 150-350HB, Yield stress>220MPa(N/mm^2), CTE 16- 18 µm/m/°C. Remanent magnetism of the finished detail must be less than 2 Gauss(0-0,2mT)	X2CrNiMo17-12-2 +AT X5CrNi18-10+AT, W.nr.1.4301+AT, W.nr.1.4404 +AT ASTM 313, 314 or equivalent.

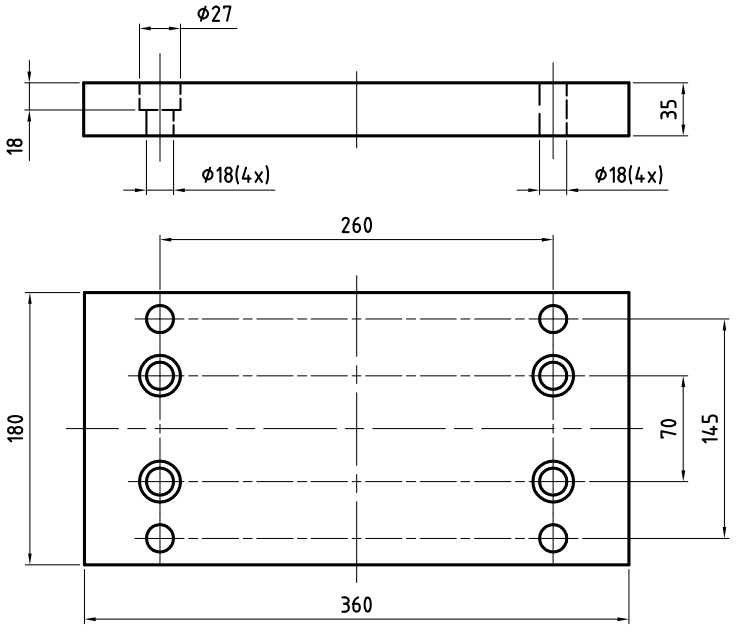

Manufacturing drawing : 3BSE030638D3200 Weight: App.17.5 kg

Prep.	PA/FMGF	Magnus X Lindström	2013-06-10	Dimension drawing		Cont.sh./ No of sh.
Appr.	PA/FMGF	Håkan F Wintzell	2013-06-14	Top adpt. plate PFTL101B/BE/BER		
Resp.dept	PA/FMGF			Övre adpt platta PFTL101B/BE/BER		-
ABB	ABB AB			Document number 3BSE012170	Lang. en	Rev. F / Sheet 1

Document status : Approved

We reserve all rights in this document and in the information contained therein. Reproduction, use or disclosure to third parties without express authority is strictly forbidden. © ABB AB

Appendix F PFCL 201 - Designing the Load Cell Installation

F.1 About This Appendix

This appendix describes the procedure for designing the load cell installation.

The following sections are included:

- Basic application considerations
- Designing the load cell installation (step-by-step guide)
- Installation requirements
- Force and wrap gain calculation
  - Horizontal mounting
  - Inclined mounting
  - Single side measurement
- Mounting the load cells
- Technical data
- Drawings
  - Cable diagram(s)
  - Dimension drawing(s)

F.2 Basic Application Considerations

Each application has its own individual demands that have to be considered; though a few basic considerations tend to repeat themselves.

- What type of process is involved (papermaking, converting, etc.)?
  Is the environment demanding (temperature, chemicals, etc.)?
- What is the tension measurement purpose; indication or closed loop control?
  Are there any specific accuracy demands involved?
- What is the machine design like? Is there the possibility to modify the design, in order to fit the most suitable load cell, or is the machine design fixed?
- What are the forces acting on the roll like (size and direction)?
  Can they be altered by redesign?

If these questions are dealt with thoroughly, the installation is very likely to be successful. However, the extent to which measurement accuracy is needed, defines the requirements when designing a load cell installation.

F.3 Step-by-Step Guide for Designing the Load Cell Installation

The procedure below defines the main considerations involved in designing a load cell installation.

1. Check load cell data so that environmental demands are met.
2. Calculate forces; vertical, horizontal and axial (cross directional).
3. Size and orient load cell so that the guidelines below are met:
   a. Try to achieve a measured value no less than 10% of web tension, in the load cell measurement direction!
   b. Select load cell size so that it is loaded as close as possible to its nominal load! Do not dimension Force component of Tension in measuring direction, F_R, for less than 10% of the load cell nominal load!
   c. If the span between maximum and minimum tension in the process is large, select load cell so that the maximum tension will be in the load cell extended range (when applicable)!
   d. The measured force component of web tension is recommended to be at least 30% of tare force component (roll weight) acting in load cell measurement direction. The reason for this recommendation is load cell signal stability, especially when the system operates in a large temperature span.
   This means that if $F_{RT} < 1/3$ of F_{nom}, F_R should be at least 10% of F_{nom}.
   For larger F_{RT}, lowest F_R is recommended to be at least 30% of F_{RT}.

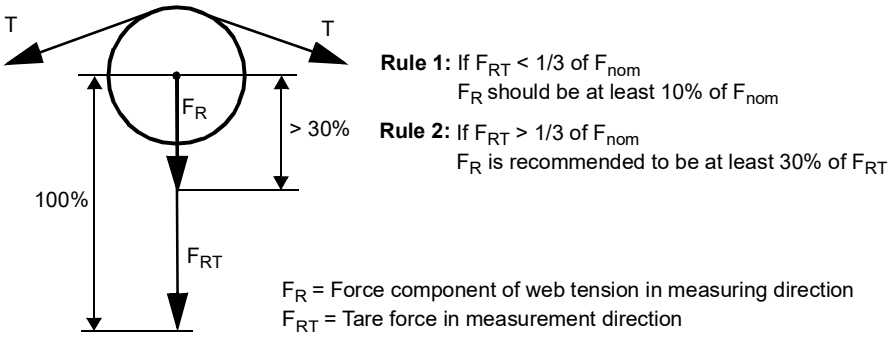

   e. Check load cell data so that limits for building height, transverse and axial forces are not exceeded.
4. Design base frame and/or adapter plates.

F.4 Installation Requirements

To achieve the specified accuracy, the best possible reliability and long-term stability, install the load cells in accordance with the requirements below.

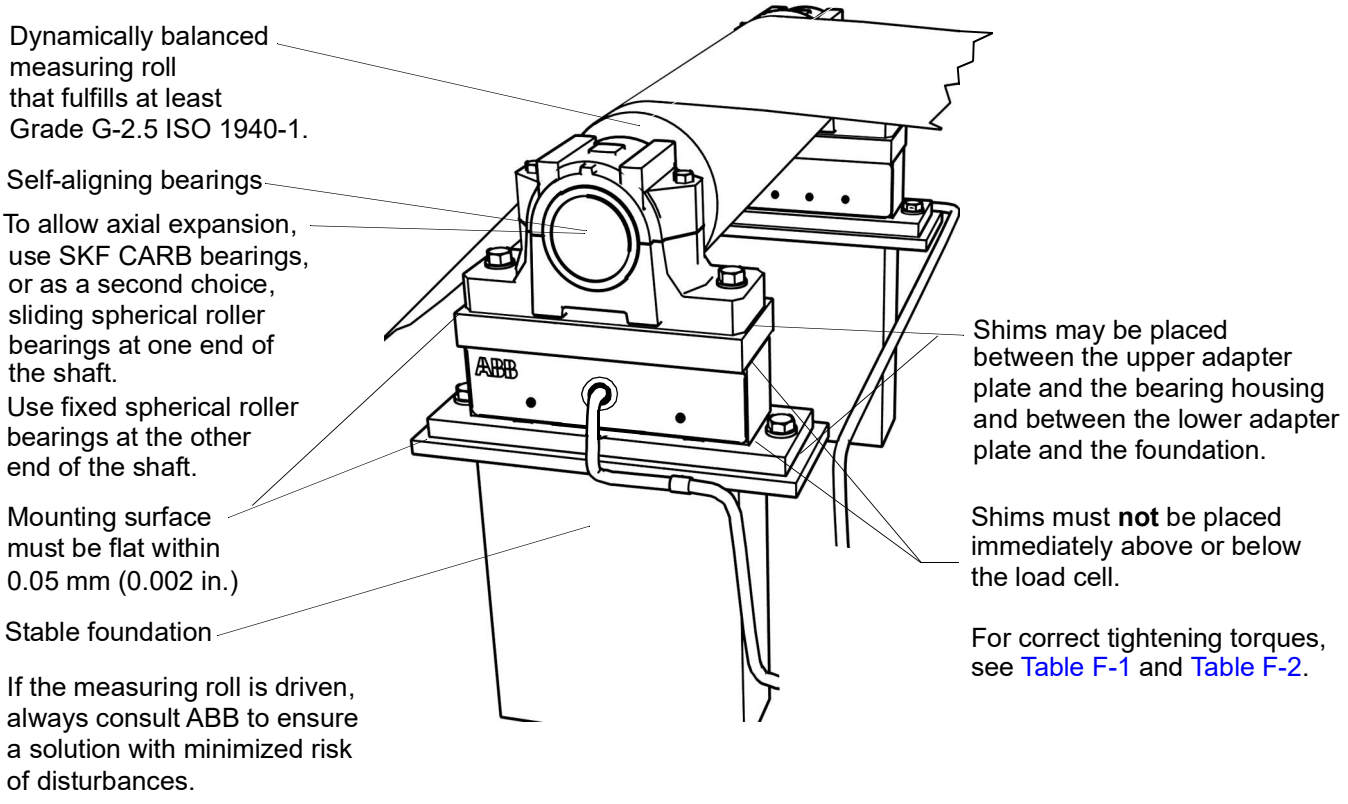

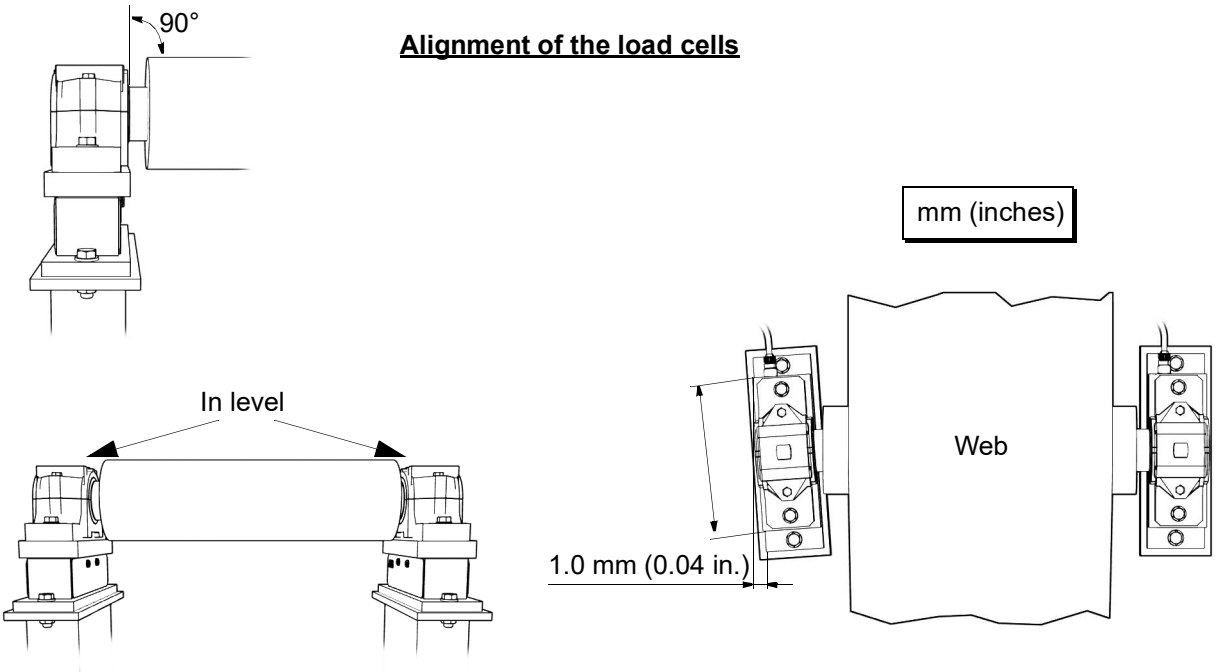

Figure F-1. Installation requirements

F.5 Mounting Alternatives, Calculating Force and Calculating Wrap Gain

F.5.1 Horizontal Mounting

PFCL 201

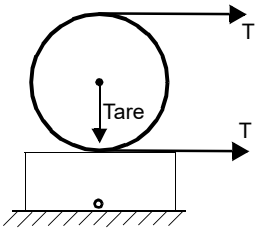

No vertical web tension force applied to the load cell.

In most cases, horizontal mounting is the most obvious and simplest solution. The load cell should thus be mounted horizontally when possible.

However, should the machine design require inclined mounting of the load cell or should the web path not give a sufficient vertical force, see figure, the inclined mounting is permitted and the calculations are somewhat more complex, (see Section F.5.2).

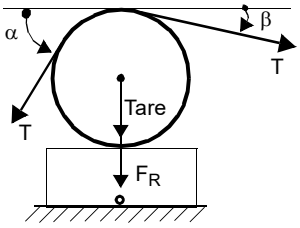

$F_R = T \times (\sin \alpha + \sin \beta)$

$F_{RT} = \text{Tare}$

$F_{Rtot} = F_R + F_{RT} = T \times (\sin \alpha + \sin \beta) + \text{Tare}$

$$T\ (\text{Tension}) = \text{Wrap gain} \times F_R$$

$$\text{Wrap gain} = \frac{T}{F_R} = \frac{T}{T(\sin\alpha + \sin\beta)}$$

$$\text{Wrap gain} = \frac{1}{\sin\alpha + \sin\beta}$$

The load cell measures the vertical forces applied to its top surface. The horizontal applied forces are not measured and do not influence the vertical measurement. There are two sources of vertical forces; the forces from the web tension and the tare weight of the roll.

Divide the total vertical force F_{Rtot} by two to get the required capacity of each load cell.

Do not oversize an ABB load cell for overload purposes as the load cell has sufficient overload capacity.

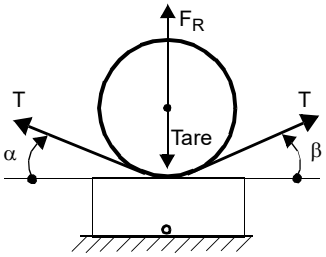

$F_R = T \times (\sin \alpha + \sin \beta)$

$F_{RT} = \text{Tare}$

$F_{Rtot} = F_{RT} - F_R = \text{Tare} - T \times (\sin \alpha + \sin \beta)$

$$T\ (\text{Tension}) = \text{Wrap gain} \times F_R$$

$$\text{Wrap gain} = \frac{T}{F_R} = \frac{T}{T(\sin\alpha + \sin\beta)}$$

$$\text{Wrap gain} = \frac{1}{\sin\alpha + \sin\beta}$$

The load cell can measure tension as well as compression.

If the T (sin α + sin β) is larger than the tare weight, the load cell will be in tension.

To get the capacity of each load cell:

1. Divide (F_R - Tare) by two
   if F_R is greater than or equal to (Tare × two).
2. Divide Tare by two
   if F_R is smaller than (Tare × two).

F.5.2 Inclined Mounting

PFCL 201

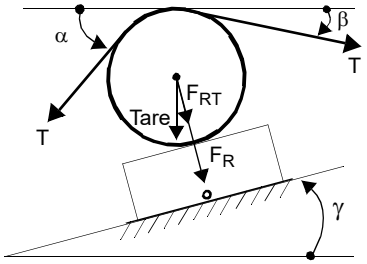

$F_R = T \times [\sin(\alpha - \gamma) + \sin(\beta + \gamma)]$

$F_{RT} = \text{Tare} \times \cos\gamma$

$F_{Rtot} = F_R + F_{RT} =$

$T \times [\sin(\alpha - \gamma) + \sin(\beta + \gamma)] + \text{Tare} \times \cos\gamma$

$T\ (\text{Tension}) = \text{Wrap gain} \times F_R$

$$\text{Wrap gain} = \frac{T}{F_R} = \frac{T}{T[\sin(\alpha - \gamma) + \sin(\beta + \gamma)]}$$

$$\text{Wrap gain} = \frac{1}{\sin(\alpha - \gamma) + \sin(\beta + \gamma)}$$

Sometimes it is necessary to mount the load cell on an incline due to mechanical design constraints of the machine or the need to have a proper force component applied to the load cell.

In this case, the incline angle modifies the tare load and the force components as shown.

F.6 Force Calculation for Measurement with a Single Load Cell

In some cases, it is sufficient to measure the tension with only a single load cell mounted at one end of the roll.

F.6.1 The Most Common and Simple Solution

The most obvious and simple solution is horizontal mounting with the web evenly distributed and centered on the roll.

As long as the roll is supported at both ends, the same calculations given in Section F.5 are valid.

NOTE

The accuracy of a single load cell measurement is highly dependent on how well the center of force can be determined. Since the cross-directional stress distribution generally is somewhat uneven, this is not easily done. The load cell will, however, produce a stable and repeatable measurement.

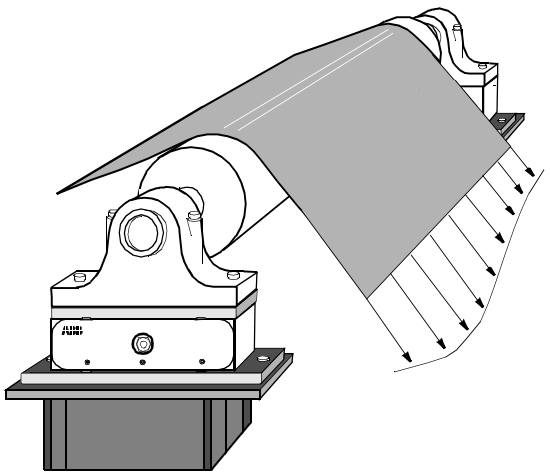

Figure F-2. Cross-directional stress distribution

F.6.2 Force Calculation when the Web is not Centered on the Roll

Use the calculations below for horizontal and inclined mounting when the web is not centered on the roll.

The applied force at the load cell will be proportional to the distance between the tension force center and the load cell centerline.

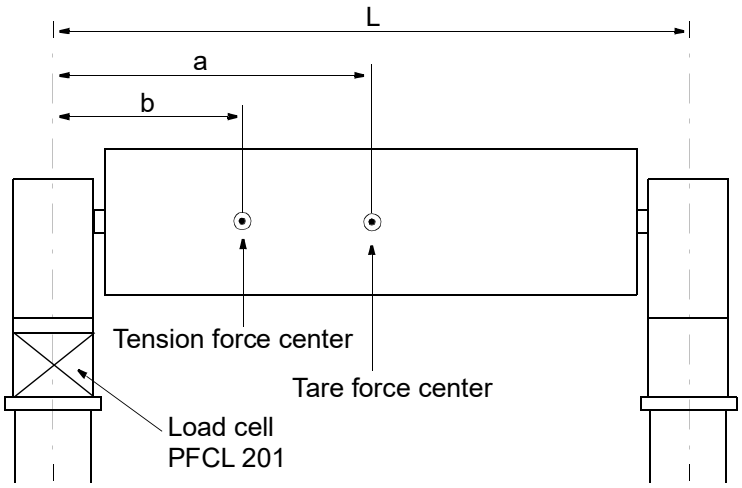

Calculation procedure:

1. Horizontal or inclined mounting?
2. Calculate F_R and F_{RT}, see Section F.5
3. Use the following equations:

   F_R for single load cell $= F_R \times \frac{L-b}{L}$

   F_{RT} for single load cell $= F_{RT} \times \frac{L-a}{L}$

   F_{Rtot} for single load cell = F_R for single load cell + F_{RT} for single load cell

   where:

   L = Distance between load cell centerline and the opposite bearing centerline

   a = Distance between tare force center and load cell centerline

   b = Distance between tension force center and load cell centerline

F.7 Mounting the Load Cells

F.7.1 Preparations

Prepare the installation in good time by checking that the necessary documents and material are available, as follows:

- Installation drawings and this manual.
- Standard tools, torque wrench and instruments.
- Rust protection, if additional protection is to be given to machined surfaces. Choose TECTYL 511 (Valvoline) or FERRYL (104), for example.
- Locking fluid (medium strength) to lock fixing screws.
- Screws as listed in Table F-1 and Table F-2 to secure the load cell, and other screws for bearing housings etc.
- Load cells, adapter plates, bearing housings, etc.

F.7.2 Mounting

The instructions below apply to a typical mounting arrangement. Variations may be allowed, provided that the requirements of Section F.4 are complied with.

1. Clean the foundation and other mounting surfaces.
2. Fit the lower adapter plate to the load cell. Tighten the screws to the torque stated in Table F-1 or Table F-2 and lock them with locking fluid.
3. Fit the load cell and the lower adapter plate to the foundation, but do not fully tighten the screws.
4. Fit the upper adapter plate to the load cell, tighten to the torque stated in Table F-1 or Table F-2, and apply locking fluid.
5. Fit the bearing housing and the roll to the upper adapter plate, but do not fully tighten the screws.
6. Adjust the load cells so that they are in parallel with each other and in line with the axial direction of the roll. Tighten the foundation screws.
7. Adjust the roll so that it is at right angles to the longitudinal direction of the load cells. Tighten the screws in the upper adapter plate.
8. Apply rust protection to any machined surfaces that are not rust proof.

Table F-1. MoS_2 lubricated, galvanized Screws According to ISO 898/1

Strength class	Dimension	Tightening torque
8.8 (1) (12.9)	M16	170 (286) Nm

Table F-2. Waxed Screws of Stainless Steel According to ISO 3506

Strength class	Dimension	Tightening torque
A2-80 (1)	M16	187 Nm

(1) Strength class 12.9 is recommended for 50 kN load cells, when large overloads are expected, especially if the fixing screws are subjected to tension.

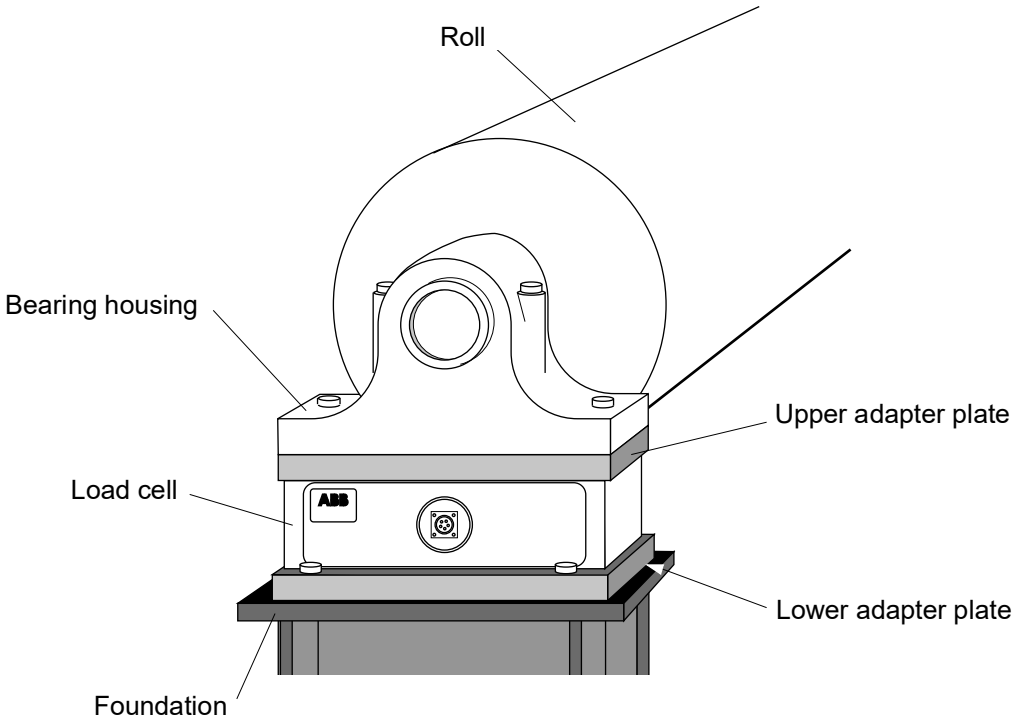

Figure F-3. Typical Installation

F.7.3 Cabling for Load Cell PFCL 201CE

Cable with protective hose shall be mounted so that the movement of the intermediate part of the load cell is not prevented. Figure F-4 shows how the cable and protective hose shall be mounted for load cell PFCL 201CE. If the intermediate part of the load cell is prevented in its movement, it will shunt force and the measured force will differ from the actual.

The direction of the cable and protecting hose can be changed by unscrewing the connection box and turning it 90-180°. Make sure that the cable between the connection box and the load cell does not get jammed or damaged when the connection box is remounted.

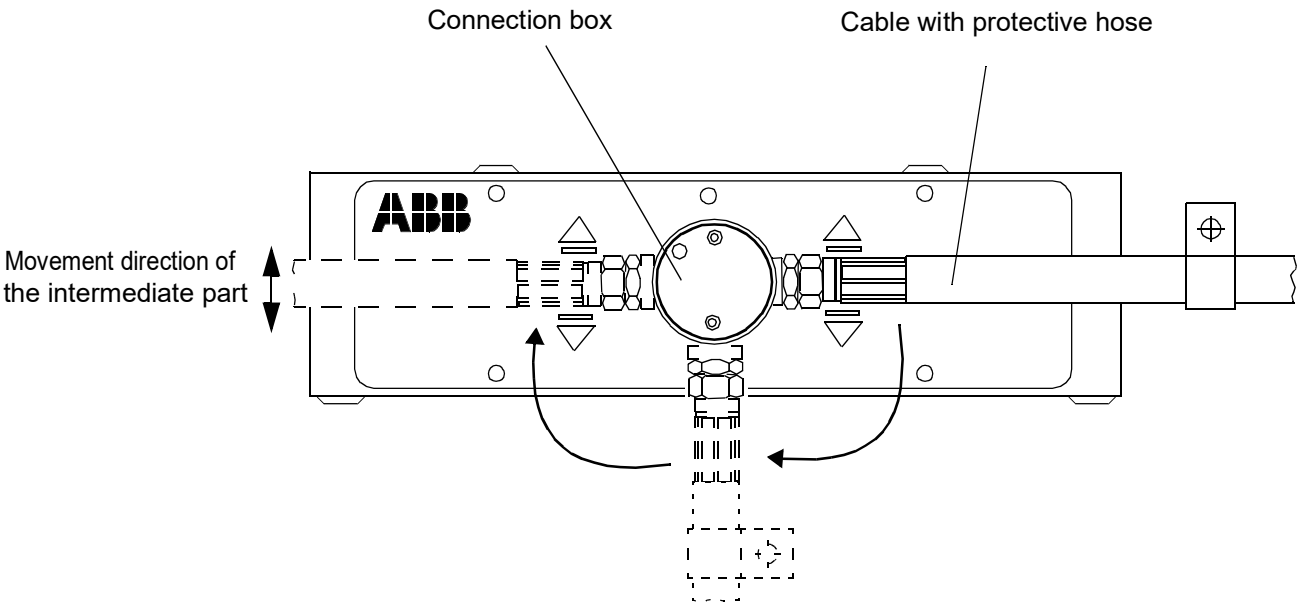

Figure F-4. Allowed Laying of Cable with Protective Hose for PFCL 201CE

NOTE!

The cable with the protective hose must not be mounted so that it bends close to the connection box, see Figure F-5, or is vertically directed.

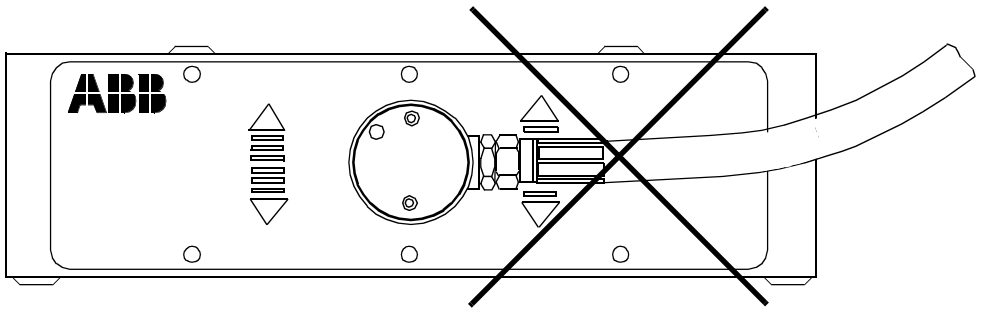

Note! Bending is not allowed in the connection.

Figure F-5. Not Allowed Laying of Cable with Protective Hose for PFCL 201CE

F.8 Technical Data Load Cell PFCL 201

Table F-3. Technical Data

	Type	PFCL 201				Unit
Nominal loads [1]						
Nominal load in measuring direction, F_{nom}	C/CD/CE	5 (1120)	10 (2250)	20 (4500)	50 (11200)	kN (lbs)
Permitted transverse force within the accuracy, F_{Vnom} (for h = 300 mm)	C/CD/CE	2.5 (562)	5 (1120)	10 (2250)	25 (5620)	kN (lbs)
Permitted axial load within the accuracy, F_{Anom} (for h = 300 mm)	C/CD/CE	1.25 (281)	2.5 (562)	5 (1120)	12.5 (2810)	kN (lbs)
Extended load in measuring direction with accuracy class ±1%, F_{ext}	C/CD/CE	7.5 (1690)	15 (3370)	30 (6740)	75 (16900)	kN (lbs)
Max permitted load						
In the direction of measurement without permanent change of data, F_{max} [2]	C/CD/CE	50 (11200)	100 (22500)	200 (45000)	500 [3] (112000)	(kN) (lbs)
In the transverse direction without permanent change of data, F_{Vmax} [2] (for h = 300 mm)	C/CD/CE	12.5 (2810)	25 (5620)	50 (11200)	125 (28100)	(kN) (lbs)
Spring constant	C/CD/CE	250 (1430)	500 (2850)	1000 (5710)	2500 (14300)	kN/mm (1000 lbs/inch)
Mechanical data						
Length	C/CD/CE			450 (17.7)		mm (inch)
Width	C			110 (4.3)		mm (inch)
	CD		138 (5.4)			mm (inch)
	CE		156 (6.1)			mm (inch)
Height	C/CD/CE			125 (4.9)		mm (inch)
Weight	C/CD/CE			37 (82)		kg (lbs)
Material		Stainless steel SIS 2387		DIN X4CrNiMo 165		

Table F-3. Technical Data

	Type	PFCL 201	Unit
Accuracy			
Accuracy class	C/CD/CE	± 0.5	%
Linearity deviation		< ± 0.3	
Repeatability error		< ± 0.05	
Hysteresis		< 0.2	
Compensated temperature range		+20 - +80 (+68 - +176)	°C (°F)
Zero point drift		50 (28)	ppm/K (ppm/F)
Sensitivity drift		100 (56)	
Working temperature range		–10 - +90 (+14 - +194)	°C (°F)
Zero point drift		100 (56)	ppm/K (ppm/F)
Sensitivity drift		200 (111)	
Storage temperature range		–40 - +90 (–40 - +194)	°C (°F)

1) Definitions of direction designations "$_V$"and "$_A$" in F_V and F_A are given in Section A.2.1.

2) F_{max} and F_{Vmax} are allowed at the same time.

3) Max. permitted load for the load cell is 10 × F_{nom}. The overload capacity for the total installation may be limited by the screws.

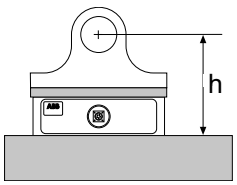

Figure F-6. Building Height

F.9 Cable Diagram, 3BSE028140D0065, Page 3/5, Rev. D

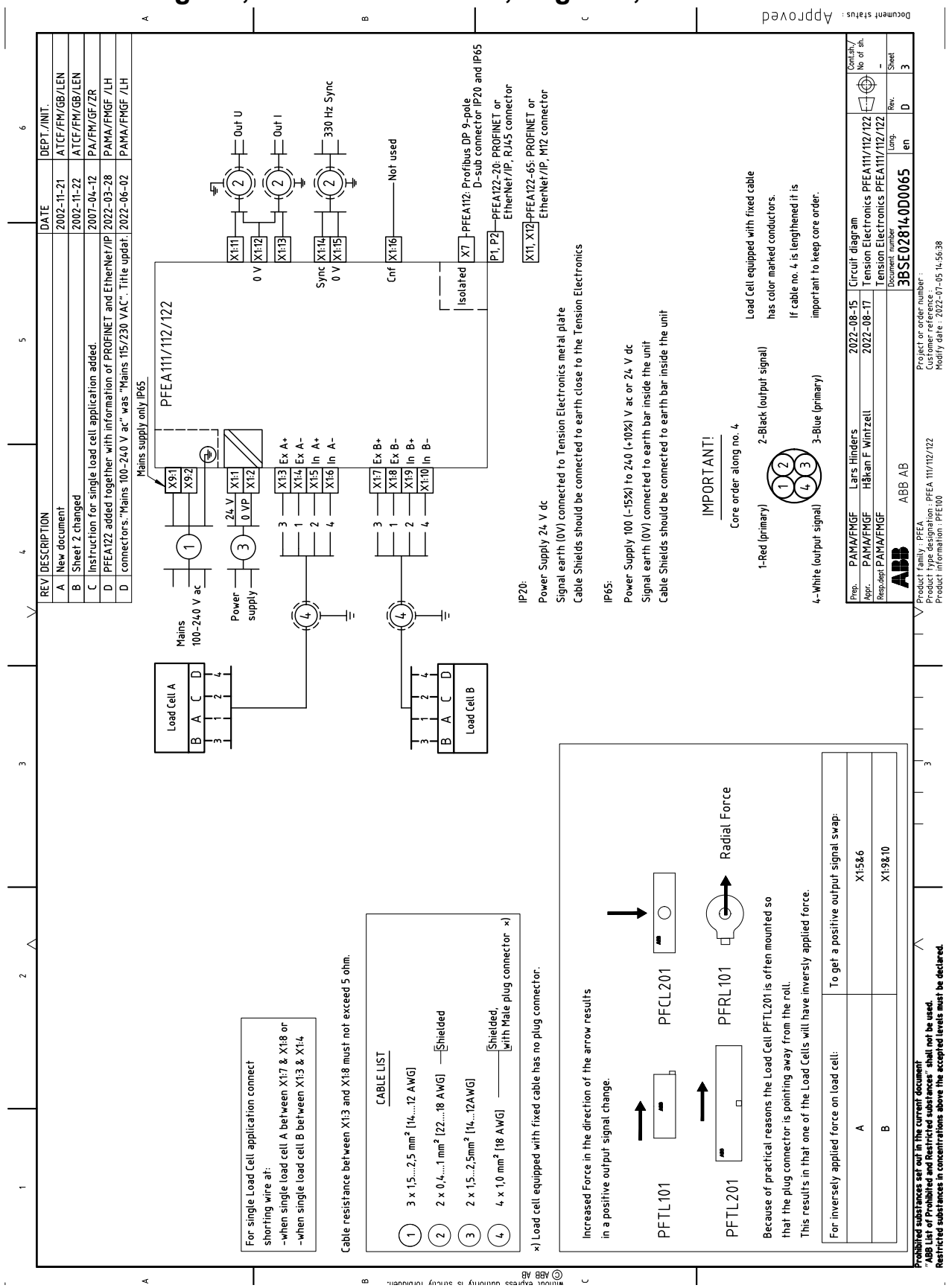

F.10 Cable Diagram, 3BSE028140D0065, Page 4/5, Rev. D

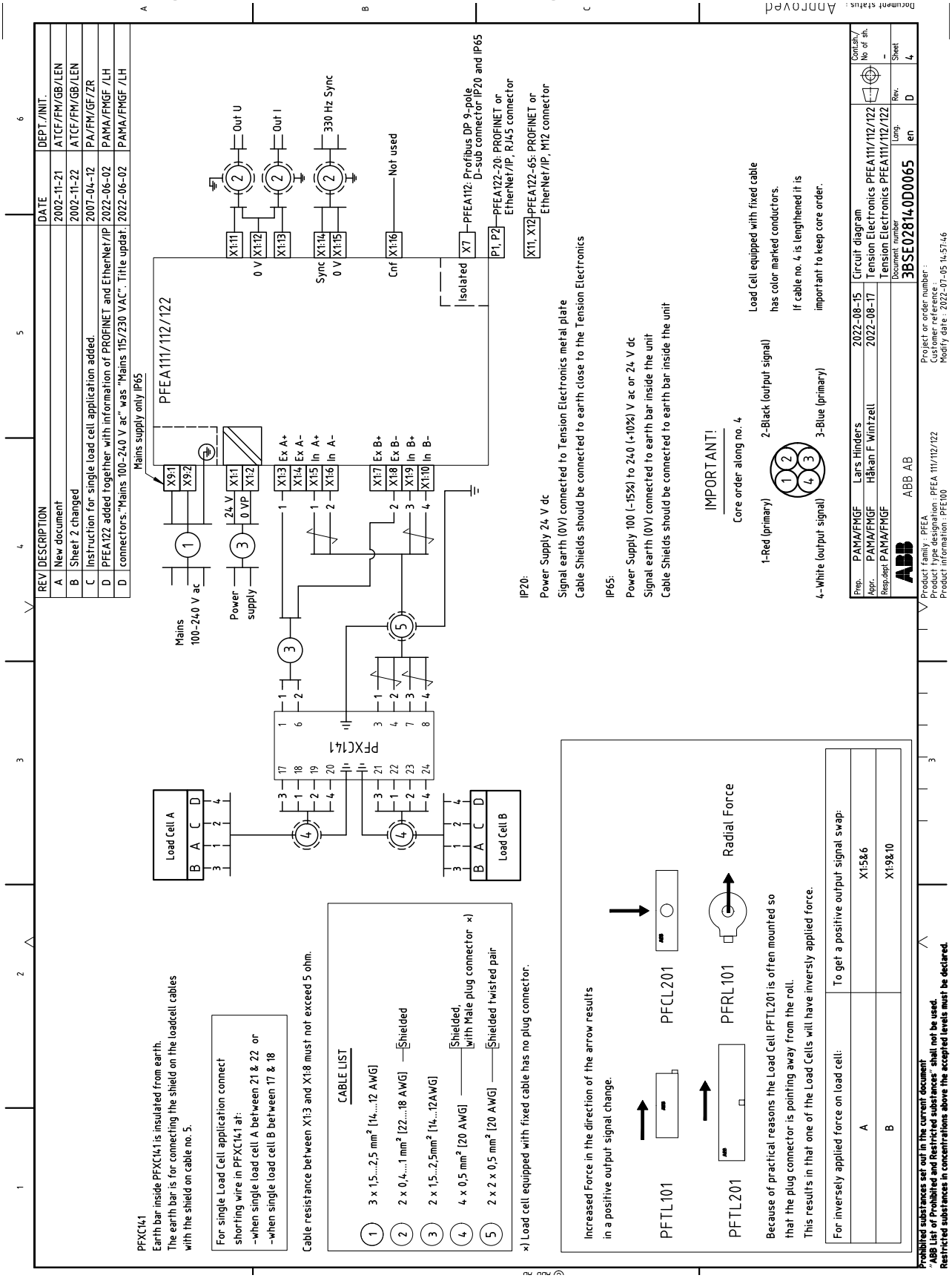

F.11 Dimension Drawing, 3BSE006699D0003, Rev. F

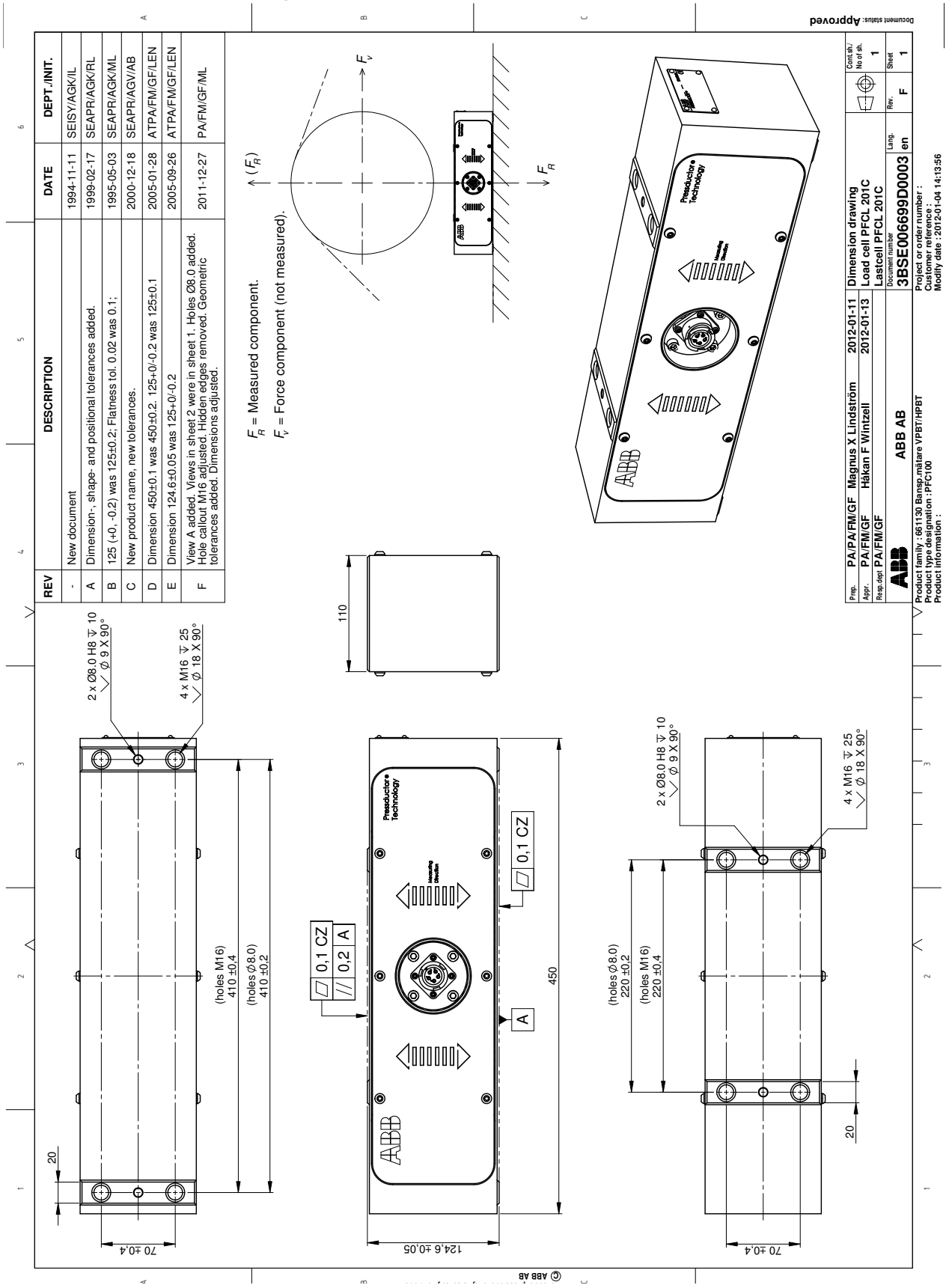

F.12 Dimension Drawing, 3BSE029522D0001, Rev. B

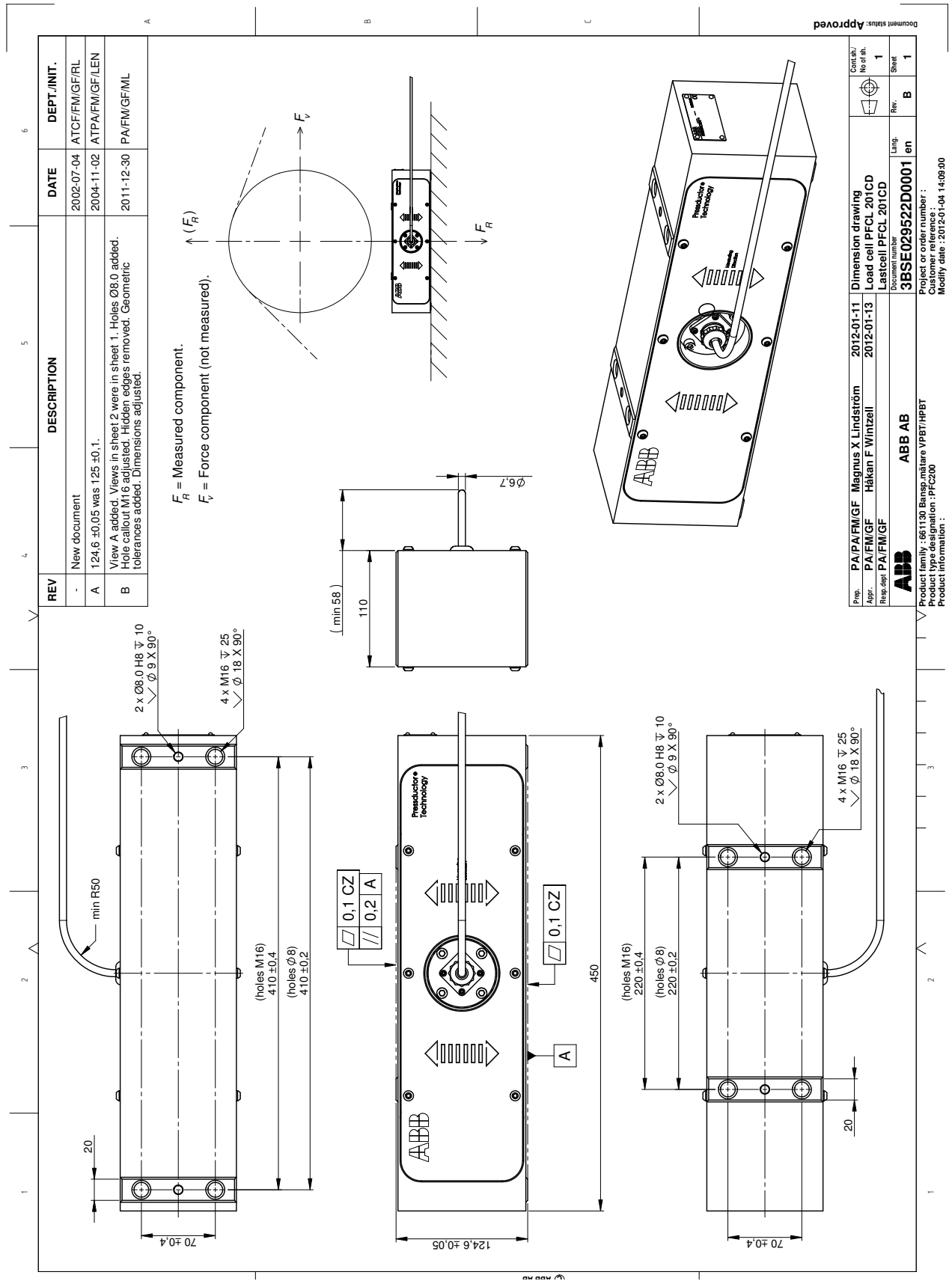

F.13 Dimension Drawing, 3BSE006699D0006, Rev. -

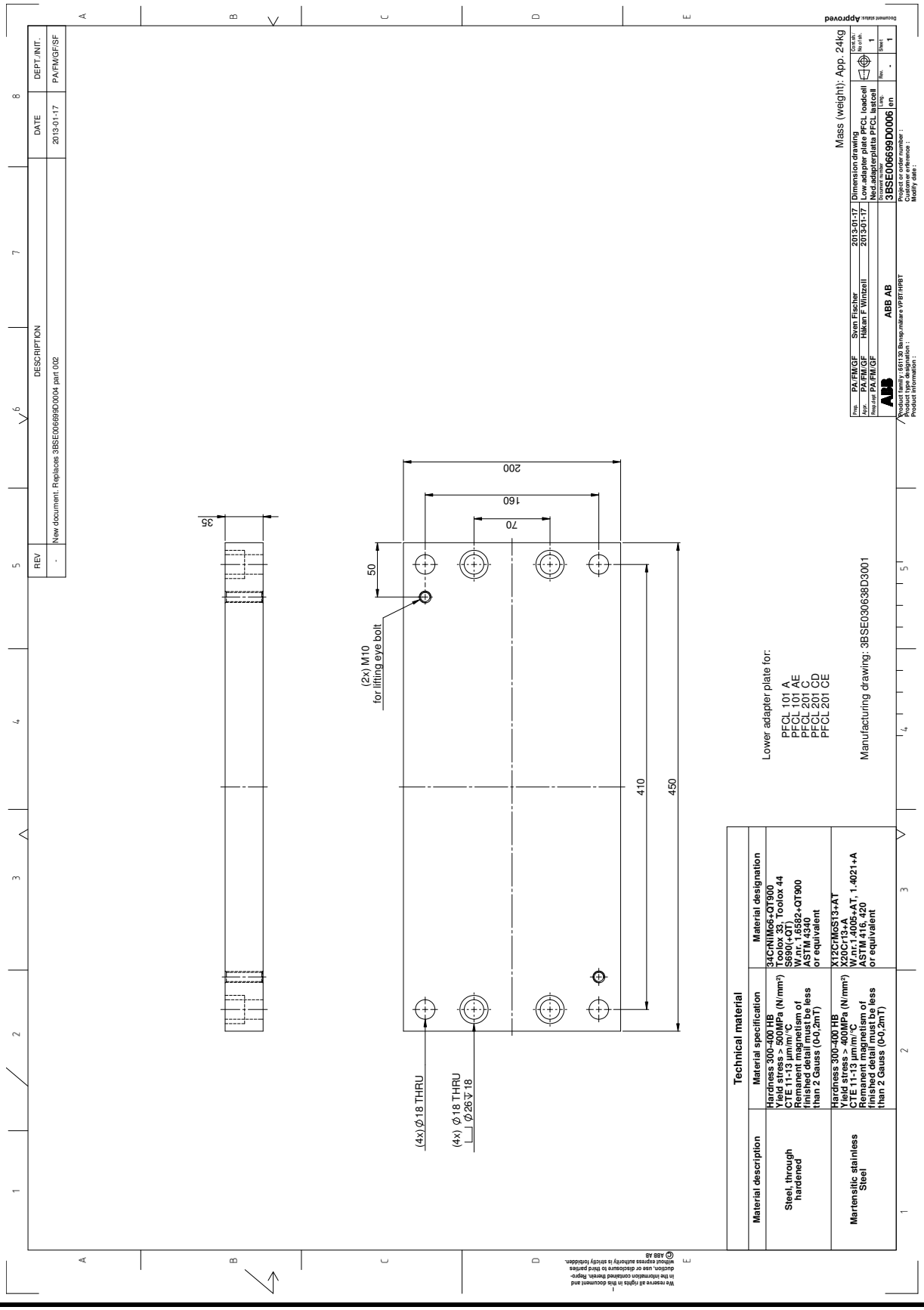

F.14 Dimension Drawing, 3BSE006699D0005, Rev. L

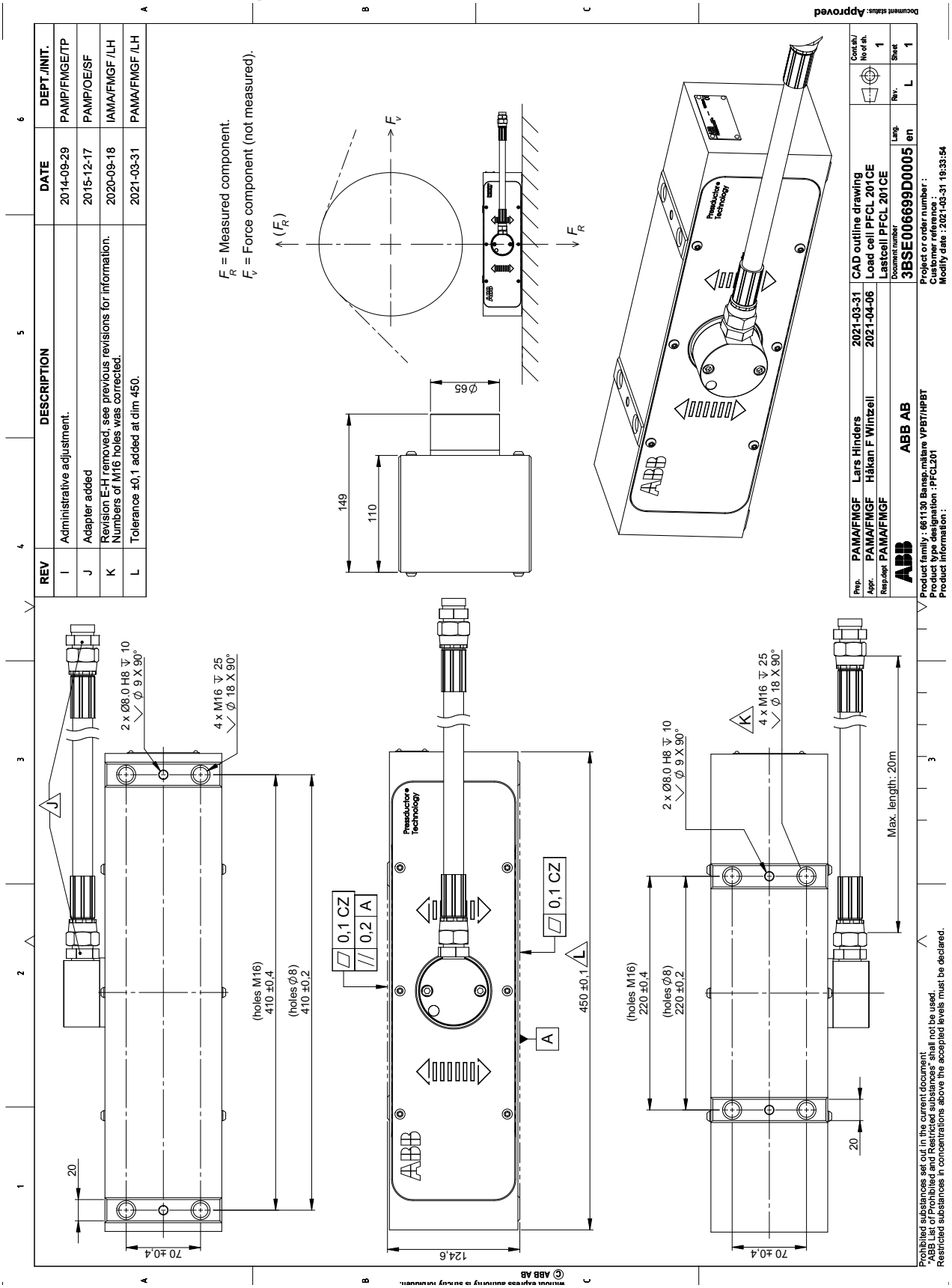

F.15 Dimension Drawing, 3BSE006699D0004, Rev. H

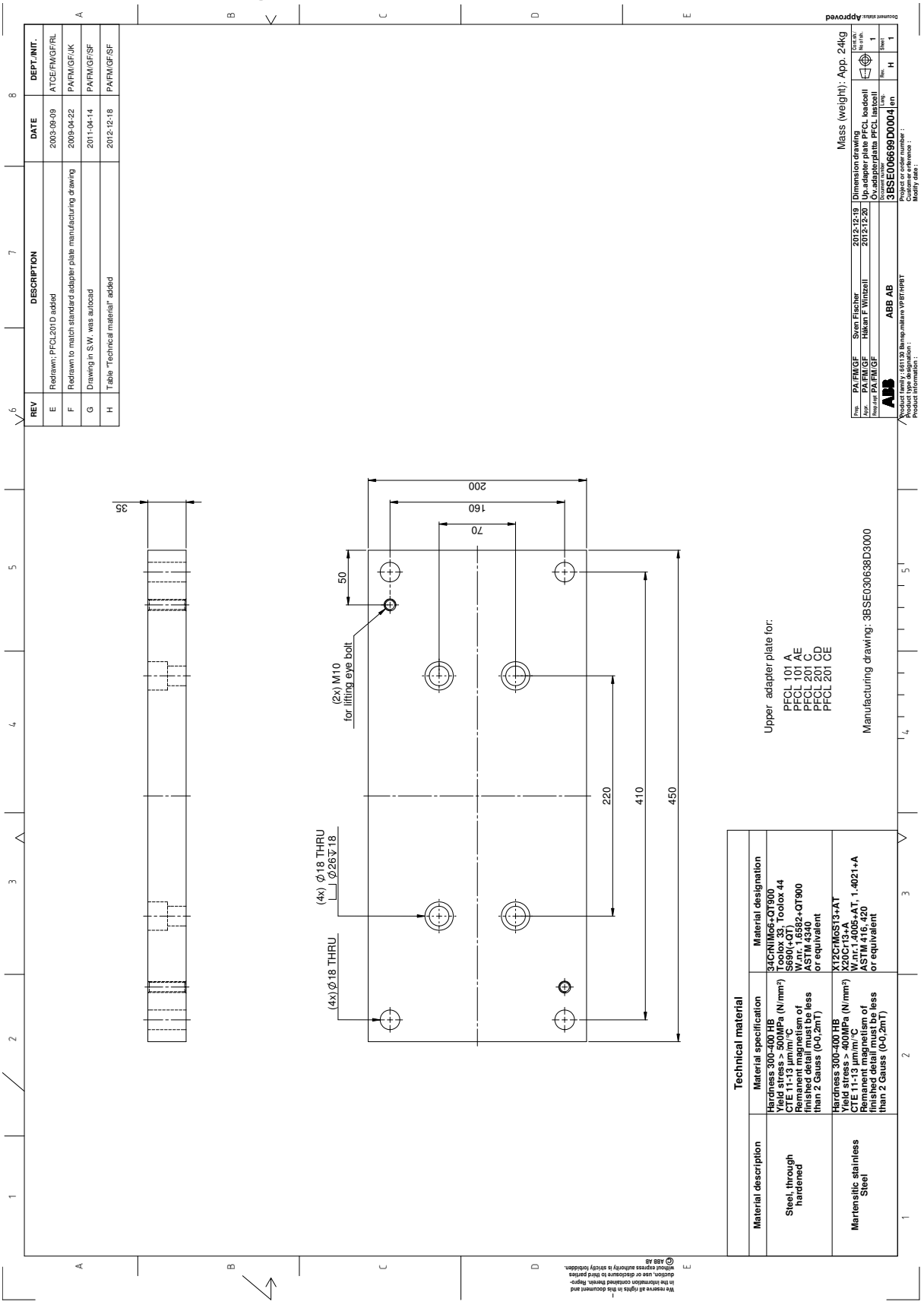

Appendix G PFTL 201 - Designing the Load Cell Installation

G.1 About This Appendix

This appendix describes the procedure for designing the load cell installation.

The following sections are included:

- Basic application considerations
- Designing the load cell installation (step-by-step guide)
- Installation requirements
- Force and wrap gain calculation
  - Horizontal mounting
  - Inclined mounting
  - Single side measurement
- Mounting the load cells
- Technical data
- Drawings
  - Cable diagram(s)
  - Dimension drawing(s)

G.2 Basic Application Considerations

Each application has its own individual demands that have to be considered; though a few basic considerations tend to repeat themselves.

- What type of process is involved (papermaking, converting, etc.)?
  Is the environment demanding (temperature, chemicals, etc.)?
- What is the tension measurement purpose; indication or closed loop control?
  Are there any specific accuracy demands involved?
- What is the machine design like? Is there the possibility to modify the design, in order to fit the most suitable load cell, or is the machine design fixed?
- What are the forces acting on the roll like (size and direction)?
  Can they be altered by redesign?

If these questions are dealt with thoroughly, the installation is very likely to be successful. However, the extent to which measurement accuracy is needed, defines the requirements when designing a load cell installation.

G.3 Step-by-Step Guide for Designing the Load Cell Installation

The procedure below defines the main considerations involved in designing a load cell installation.

1. Check load cell data so that environmental demands are met.
2. Calculate forces; vertical, horizontal and axial (cross directional).
3. Size and orient load cell so that the guidelines below are met:
   a. Try to achieve a measured value no less than 10% of web tension, in the load cell measurement direction!
   b. Select load cell size so that it is loaded as close as possible to its nominal load! Do not dimension Force component of Tension in measuring direction, F_R, for less than 10% of the load cell nominal load!
   c. If the span between maximum and minimum tension in the process is large, select load cell so that the maximum tension will be in the load cell extended range (when applicable)!
   d. The measured force component of web tension is recommended to be at least 30% of tare force component (roll weight) acting in load cell measurement direction. The reason for this recommendation is load cell signal stability, especially when the system operates in a large temperature span.
   This means that if $F_{RT} < 1/3$ of F_{nom}, F_R should be at least 10% of F_{nom}.
   For larger F_{RT}, lowest F_R is recommended to be at least 30% of F_{RT}.

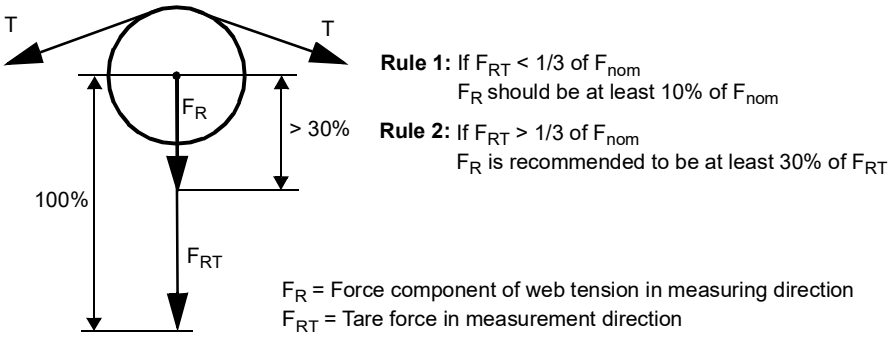

   e. Check load cell data so that limits for building height, transverse and axial forces are not exceeded.
4. Design base frame and/or adapter plates.

G.4 Installation Requirements

To achieve the specified accuracy, the best possible reliability and long-term stability, install the load cells in accordance with the requirements below.

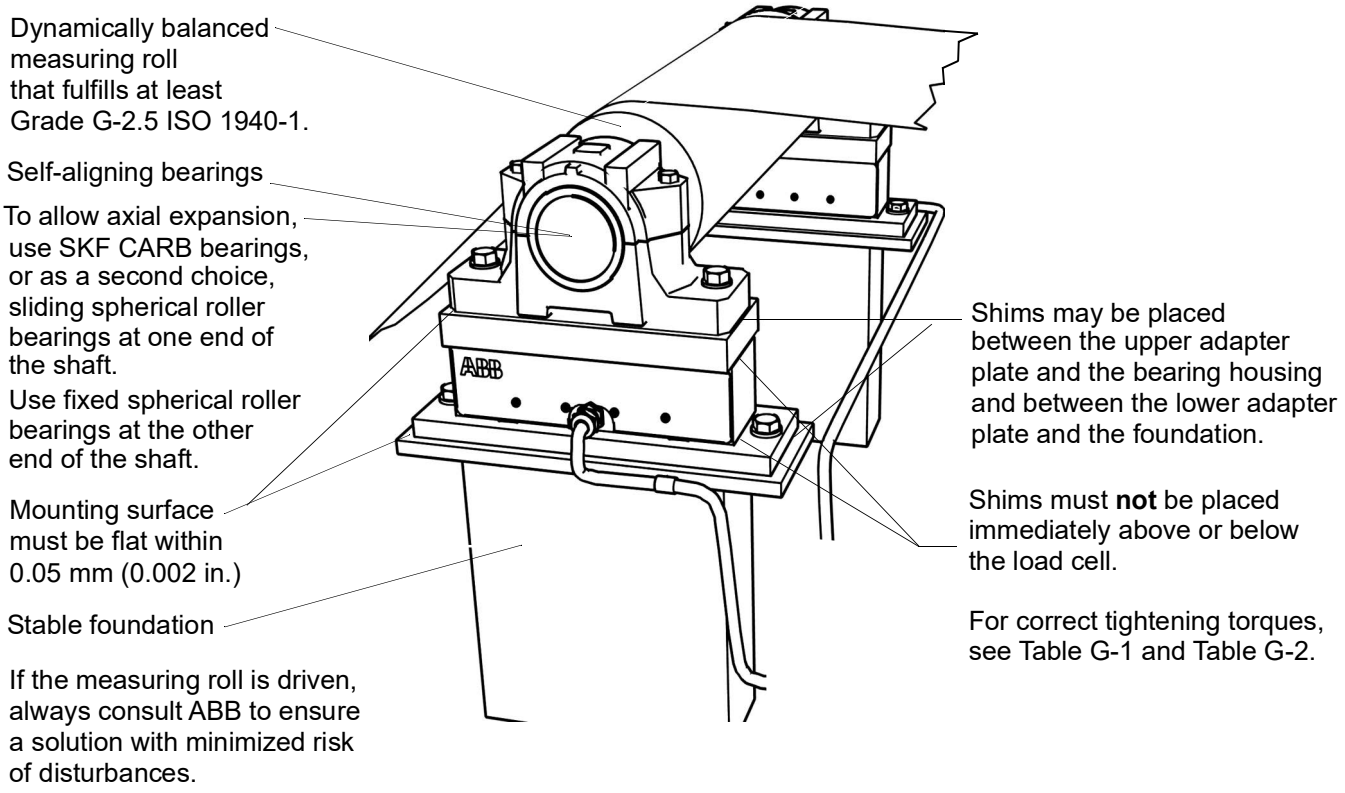

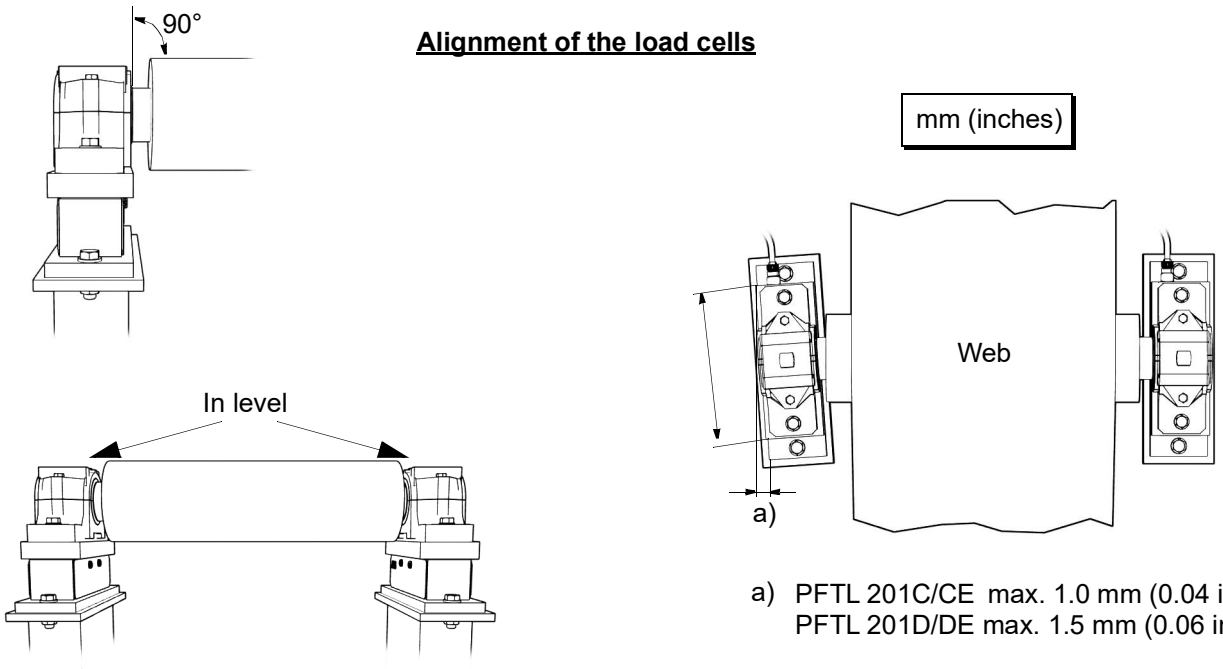

Figure G-1. Installation requirements

G.5 Mounting Alternatives, Calculating Force and Calculating Wrap Gain

G.5.1 Horizontal Mounting

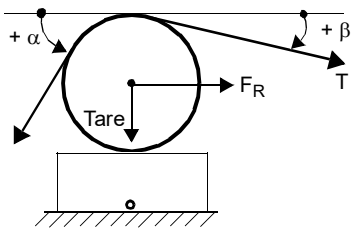

In most cases, horizontal mounting is the most obvious and simplest solution. The load cell should thus be mounted horizontally when possible.

$F_R = T \times (\cos\beta - \cos\alpha)$

$F_{RT} = 0$ (Tare force is not measured)

$F_{Rtot} = F_R + F_{RT} = T \times (\cos\beta - \cos\alpha)$

T (Tension) = Wrap gain $\times F_R$

Wrap gain $= \frac{T}{F_R} = \frac{T}{T(\cos\beta - \cos\alpha)}$

Wrap gain $= \frac{1}{\cos\beta - \cos\alpha}$

G.5.2 Inclined Mounting

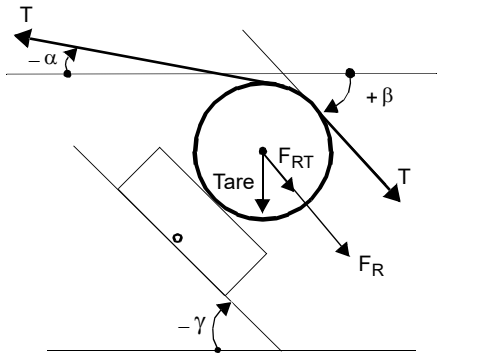

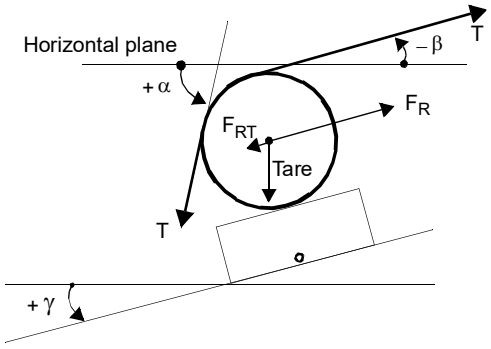

$F_R = T \times [\cos(\beta + \gamma) - \cos(\alpha - \gamma)]$

$F_{RT} = -\text{Tare} \times \sin\gamma$

$F_{Rtot} = F_R + F_{RT} =$

$T \times [\cos(\beta + \gamma) - \cos(\alpha - \gamma)] + (-\text{Tare} \times \sin\gamma)$

T (Tension) = Wrap gain $\times F_R$

$$\text{Wrap gain} = \frac{T}{F_R} = \frac{T}{T[\cos(\beta + \gamma) - \cos(\alpha - \gamma)]}$$

$$\text{Wrap gain} = \frac{1}{\cos(\beta + \gamma) - \cos(\alpha - \gamma)}$$

Sometimes it is necessary to mount the load cell on an incline due to mechanical design constraints of the machine or the need to have a sufficient force component applied to the load cell.

Inclined mounting adds a component of tare force in the measuring direction and modifies the force components as shown.

NOTE

When calculating, it is important that the angles are set into the equations with the correct signs in relation to the horizontal plane.

G.6 Force Calculation for Measurement with a Single Load Cell

In some cases, it is sufficient to measure the tension with only a single load cell mounted at one end of the roll.

G.6.1 The Most Common and Simple Solution

The most obvious and simple solution is horizontal mounting with the web evenly distributed and centered on the roll.

As long as the roll is supported at both ends, the same calculations given in Section G.5 are valid.

NOTE

The accuracy of a single load cell measurement is highly dependent on how well the center of force can be determined. Since the cross-directional stress distribution generally is somewhat uneven, this is not easily done. The load cell will, however, produce a stable and repeatable measurement.

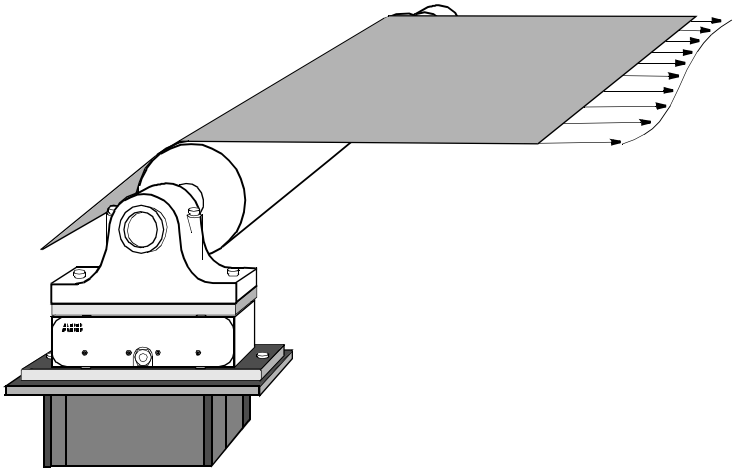

Figure G-2. Cross-directional stress distribution

G.6.2 Force Calculation when the Web is not Centered on the Roll

Use the calculations below for horizontal and inclined mounting when the web is not centered on the roll.

The applied force at the load cell will be proportional to the distance between the tension force center and the load cell centerline, see figure.

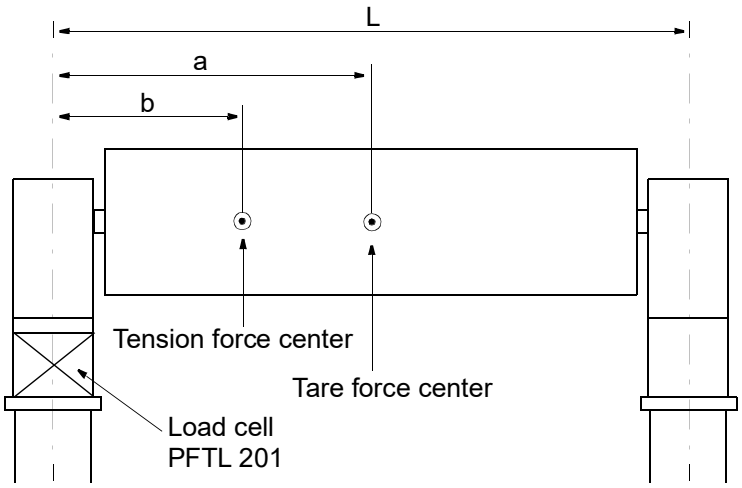

Calculation procedure:

1. Horizontal or inclined mounting?
2. Calculate F_R and F_{RT}, see Section G.5.
3. Use the following equations:

   F_R for single load cell $= F_R \times \frac{L-b}{L}$

   F_{RT} for single load cell $= F_{RT} \times \frac{L-a}{L}$

   F_{Rtot} for single load cell = F_R for single load cell + F_{RT} for single load cell

   where:

   L = Distance between load cell centerline and the opposite bearing centerline

   a = Distance between tare force center and load cell centerline

   b = Distance between tension force center and load cell centerline

G.7 Mounting the Load Cells

G.7.1 Preparations

Prepare the installation in good time by checking that the necessary documents and material are available, as follows:

- Installation drawings and this manual.
- Standard tools, torque wrench and instruments.
- Rust protection, if additional protection is to be given to machined surfaces. Choose TECTYL 511 (Valvoline) or FERRYL (104), for example.
- Screws as listed in Table G-1 or Table G-2 to secure the load cell, and other screws for bearing housings etc.
- Load cells, adapter plates, bearing housings, etc.

G.7.2 Adapter plates

The adapter plates shall normally be provided with stop blocks in order to prevent movement, if the load cells are overloaded. The screw joints may not alone fix the load cells in a proper way at overload. See drawing in Section G.15 and Section G.16.

G.7.3 Mounting

The instructions below apply to a typical mounting arrangement. Variations are allowed, provided that the requirements of Section G.4 are complied with.

1. Clean the foundation and other mounting surfaces.
2. Fit the lower adapter plate to the load cell. Tighten the screws to the torque stated in Table G-1 or Table G-2 and lock them with locking fluid.
3. Fit the load cell and the lower adapter plate to the foundation, but do not fully tighten the screws.
4. Fit the upper adapter plate to the load cell, tighten to the torque stated in Table G-1 or Table G-2, and apply locking fluid.
5. Fit the bearing housing and the roll to the upper adapter plate, but do not fully tighten the screws.
6. Adjust the load cells so that they are in parallel with each other and in line with the axial direction of the roll. Tighten the foundation screws.
7. Adjust the roll so that it is at right angles to the longitudinal direction of the load cells. Tighten the screws in the upper adapter plate.
8. Apply rust protection to any machined surfaces not rust proof.

Table G-1. MoS_2 lubricated, galvanized screws according to ISO 898/1

Strength class	Dimension	Tightening torque
8.8 * (12.9)	M24	572 (963) Nm
8.8 * (12.9)	M36	1960 (3310) Nm

Table G-2. Waxed screws of stainless steel according to ISO 3506

Strength class	Dimension	Tightening torque
A2-80 *	M24	629 Nm
A2-80 *	M36	2160 Nm

* Strength class 12.9 must be used for load cells PFTL 201C-50 kN and PFTL 201D-100 kN.

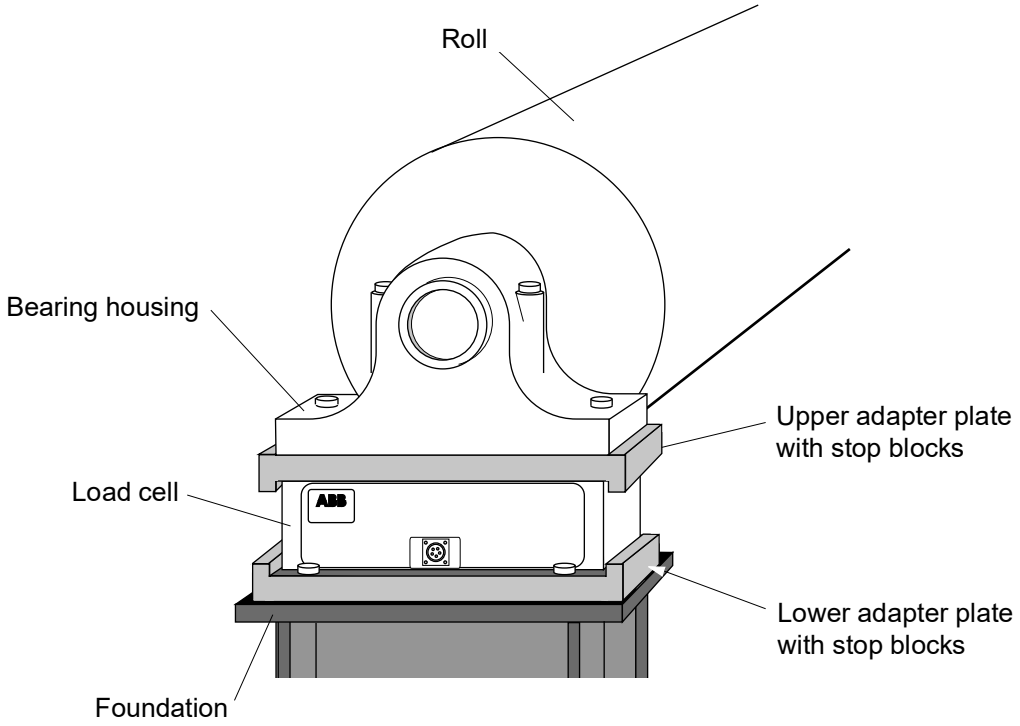

Figure G-3. Typical installation

G.7.4 Cabling

Figure G-4 shows how the cable and protective hose shall be mounted for load cells PFTL 201CE and PFTL 201DE. The direction of the cable and protecting hose can be changed.

NOTE

The cable with protective hose shall not be rotated more than 180° from its initial mounting direction, otherwise the cable can be damaged.

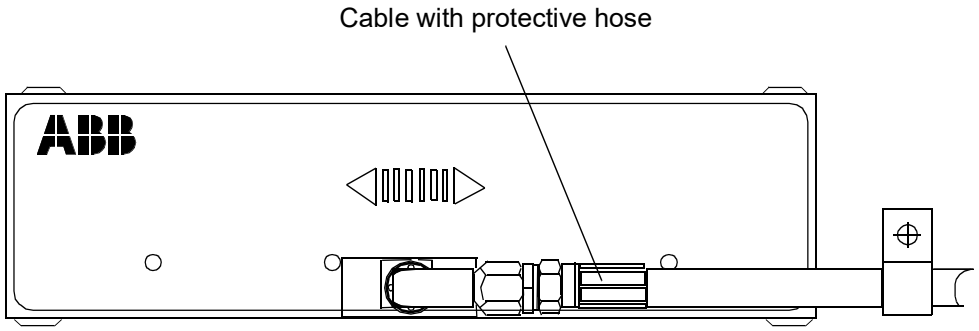

Figure G-4. Allowed laying of cable with protective hose for PFTL 201CE and PFTL 201DE

G.8 Technical data load cell PFTL 201

Table G-3. Technical data for different types of load cell PFTL 201

	PFTL 201, type	Data				Unit
Nominal load						
Nominal load in measuring direction, F_{nom}	C/CE	10 (2250)	20 (4500)	50 (11200)		kN (lbs)
	D/DE			50 (11200)	100 (22500)	
Permitted transverse load within the accuracy, F_{Vnom}	C/CE	100 (22500)	200 (45000)	250 (56200)		kN (lbs)
	D/DE			500 (112000)	500 (112000)	
Permitted axial load within the accuracy, F_{Anom} (h=300 mm) 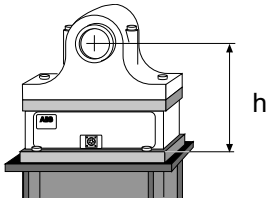	C/CE	20 (4500)	20 (4500)	50 (11250)		kN (lbs)
	D/DE			100 (22500)	100 (22500)	
Extended load in measuring direction with accuracy class ±1%, F_{ext}	C/CE	15 (3370)	30 (6740)	75 (16900)		kN (lbs)
	D/DE			75 (16900)	150 (33700)	
Overload capacity						
Maximal load in measuring direction without permanent change of data, F_{max}	C/CE	100 (11200)	200 (22500)	500 (56200)		kN (lbs)
	D/DE			500 (56200)	1000 (112000)	
Spring constant	C/CE	1000 (5710)	1000 (5710)	1000 (5710)		kN/mm (1000 lbs/inch)
	D/DE			2000 (11400)	2000 (11400)	

Table G-3. Technical data for different types of load cell PFTL 201

	PFTL 201, type	**Data**				**Unit**
Mechanical data						
Length	C/CE	450 (17.7)	450 (17.7)	450 (17.7)		mm (inch)
	D/DE			650 (25.6)	650 (25.6)	
Width	C	110 (4.3)	110 (4.3)	110 (4.3)		mm (inch)
	D			150 (5.9)	150 (5.9)	
	CE	180 (7.1)	180 (7.1)	180 (7.1)		
	DE			220 (8.7)	220 (8.7)	
Height	C/CE	125 (4.9)	125 (4.9)	125 (4.9)		mm (inch)
	D/DE			150 (5.9)	150 (5.9)	
Weight	C/CE	35 (77)	35 (77)	35 (77)		kg (lbs)
	D/DE			80 (176)	80 (176)	
Material	C/D/CE/DE	Stainless steel SIS 2387 DIN X4CrNiMo165				
Accuracy						
Accuracy class	C/D/CE/DE	± 0.5				%
Linearity deviation		± 0.3				
Repeatability error		< ± 0.05				
Hysteresis		<0.2				
Compensated temperature range		+20 - +80 (+68 - +176)				°C (°F)
Zero point drift		50 (28)				ppm/K (ppm/°F)
Sensitivity drift		100 (56)				
Working temperature range		-10 - +90 (+14 - +194)				°C (°F)
Zero point drift		100 (56)				ppm/K (ppm/°F)
Sensitivity drift		200 (111)				
Storage temperature range		-40 - +90 (-40 - +194)				°C (°F)

G.9 Cable Diagram, 3BSE028140D0065, Page 3/5, Rev. D

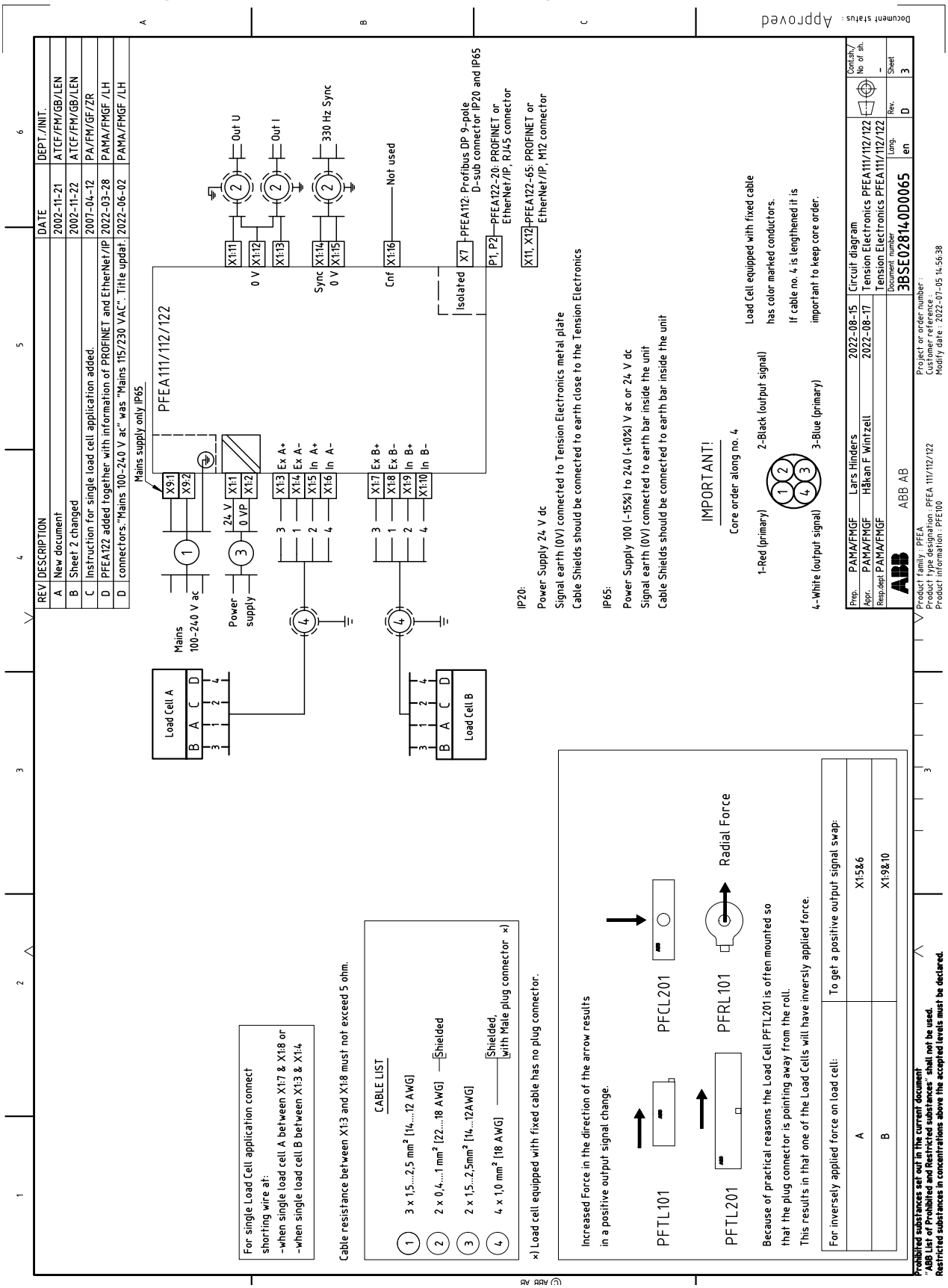

G.10 Cable Diagram, 3BSE028140D0065, Page 4/5, Rev. D

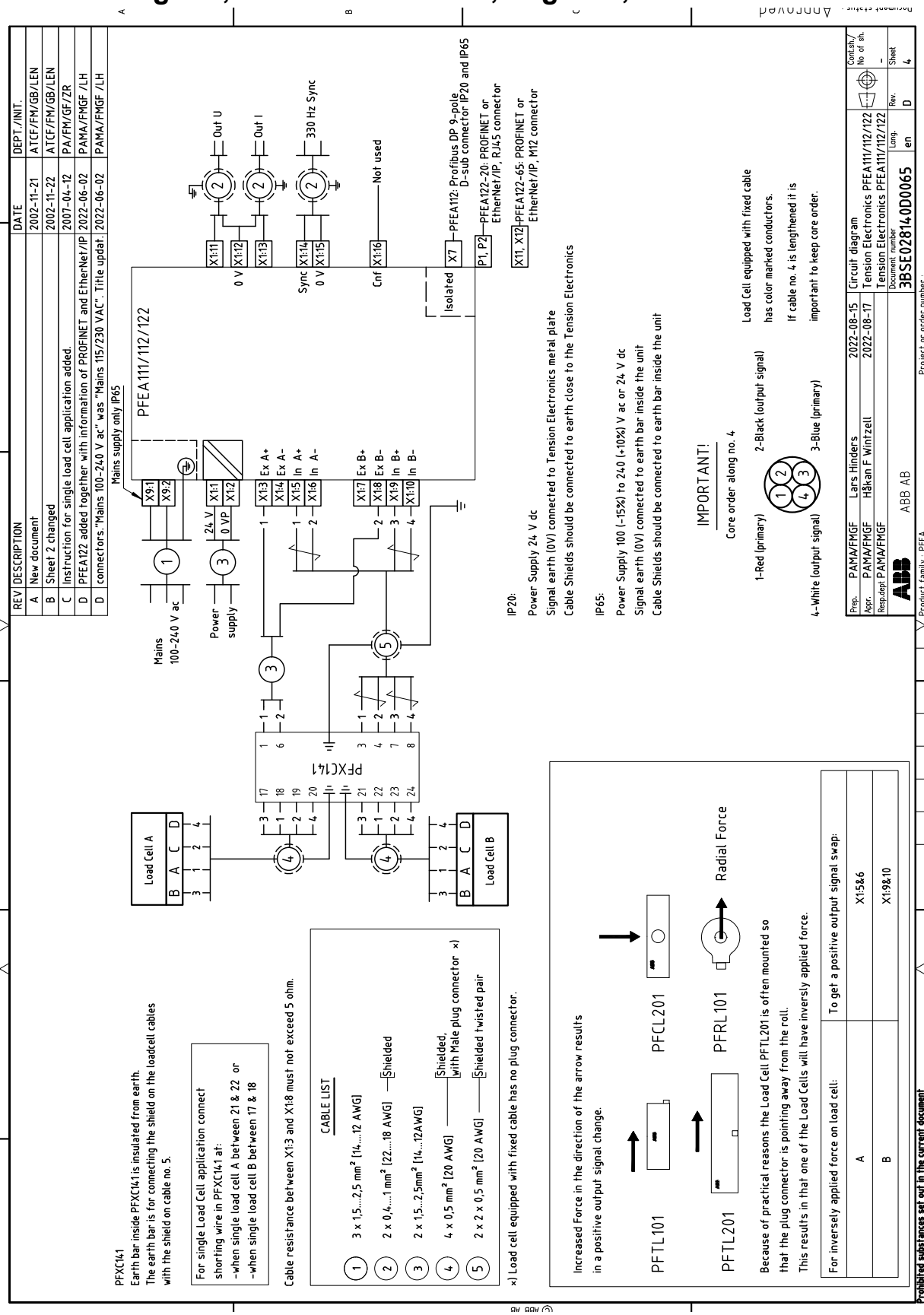

G.11 Dimension Drawing, 3BSE008723, Rev. D

REV	DESCRIPTION	DATE	DEPT./INIT.
D	Redrawn and uppdated in Solid Works. Previous revision table removed, exist on revision C.	2011-12-14	PA/FM/GF/LEN

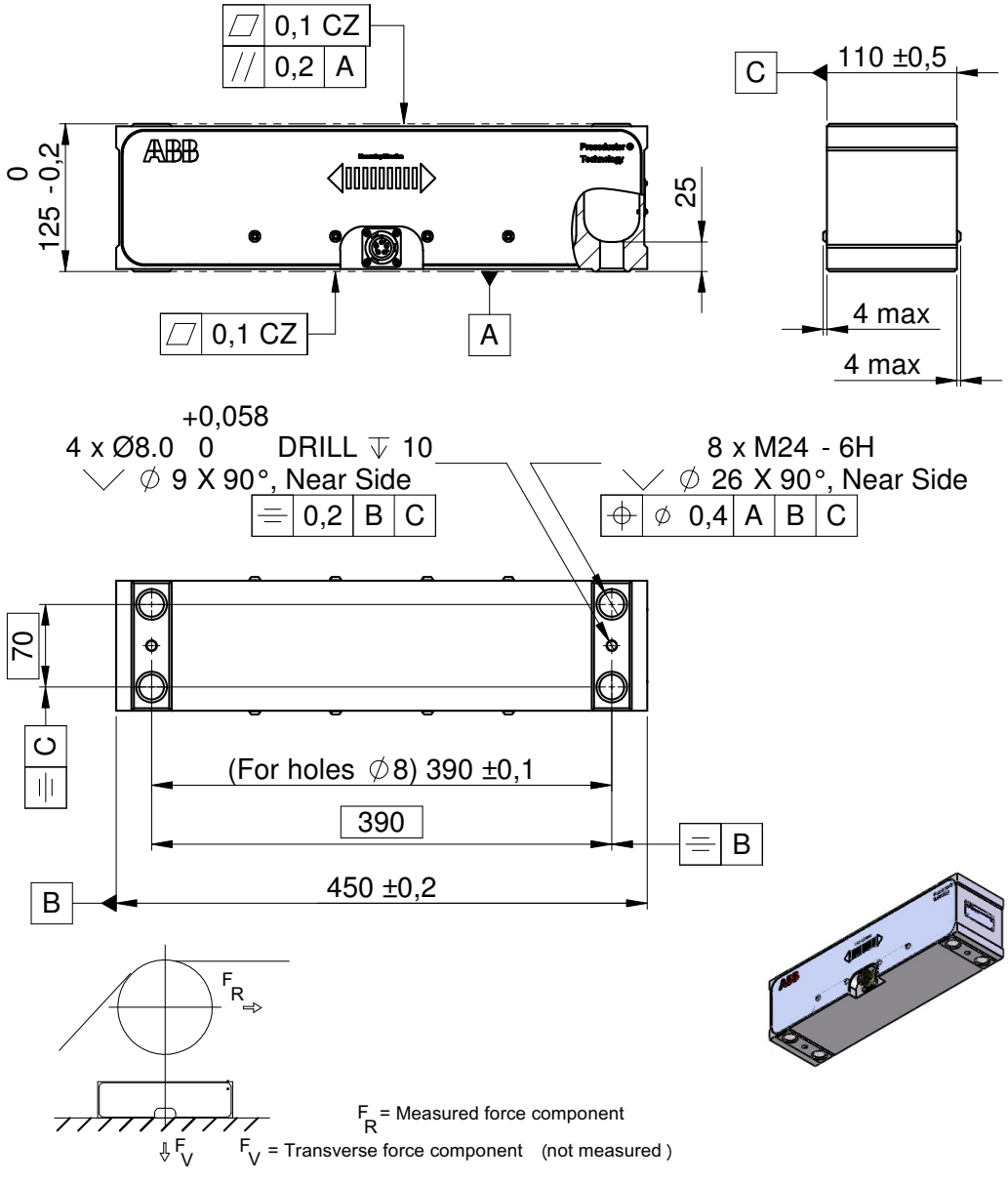

General tolerances according to SS-ISO2768-m

Prep.	PA/FM/GF	Lars-Erik Nilsson	2011-12-14	Dimension drawing Load Cell PFTL201-C Lastcell PFTL201-C			Cont.sh./ No of sh. 1
Appr.	PA/FM/GF	Håkan F Wintzell	2012-02-15				
Resp.dept	PA/FM/GF						
ABB	ABB AB			Document number 3BSE008723	Lang. en	Rev. D	Sheet 1

Document status: **Approved**

We reserve all rights in this document and in the information contained therein. Reproduction, use or disclosure to third parties without express authority is strictly forbidden.
© ABB AB

G.12 Dimension Drawing, 3BSE008904, Rev. D

REV	DESCRIPTION	DATE	DEPT./INIT.
D	Redrawn and uppdated in Solid Works. Previous revision table removed, exist on revision C.	2011-12-14	PA/FM/GF/LEN

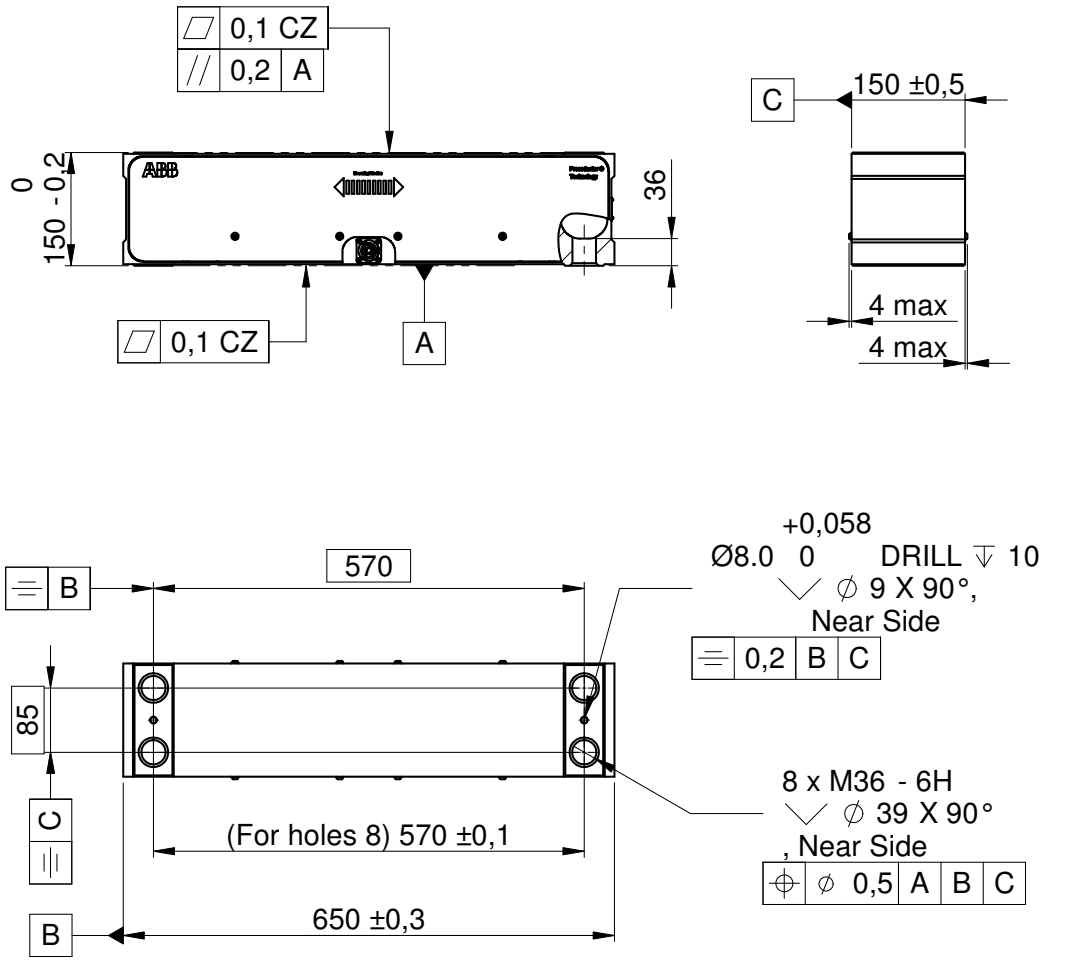

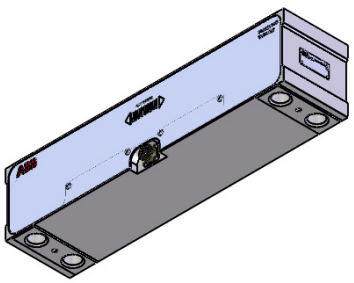

General tolerances according to SS-ISO2768-m

We reserve all rights in this document and in the information contained therein. Reproduction, use or disclosure to third parties without express authority is strictly forbidden.
© ABB AB

Prep.	PA/FM/GF	Lars-Erik Nilsson	2011-12-14	Dimension drawing			Cont.sh./ No of sh.
Appr.	PA/FM/GF	Håkan F Wintzell	2012-02-15	Load Cell PFTL201-D			1
Resp.dept	PA/FM/GF			Lastcell PFTL201-D			
ABB	ABB AB			Document number 3BSE008904	Lang. en	Rev. D	Sheet 1

Product family : 661130 Bansp.mätare VPBT/HPBT
Product type designation :
Product information :

Project or order number :
Customer reference :
Modify date : 2011-12-14 12:52:43

Document status: Approved

G.13 Dimension Drawing, 3BSE008724, Rev. G

REV	DESCRIPTION	DATE	DEPT./INIT.
E	Redrawn and uppdated in Solid Works. Previous revision table removed, exist on revision D.	2012-01-25	PA/FM/GF/LEN
F	Adapter for hose added. Ø19 was 25 and radius 85 was 150	2017-01-09	IAMA/OE/SF
G	"CAUTION" information added to avoid damage on hose during handling.	2023-02-23	PAMA/FMGF /LH

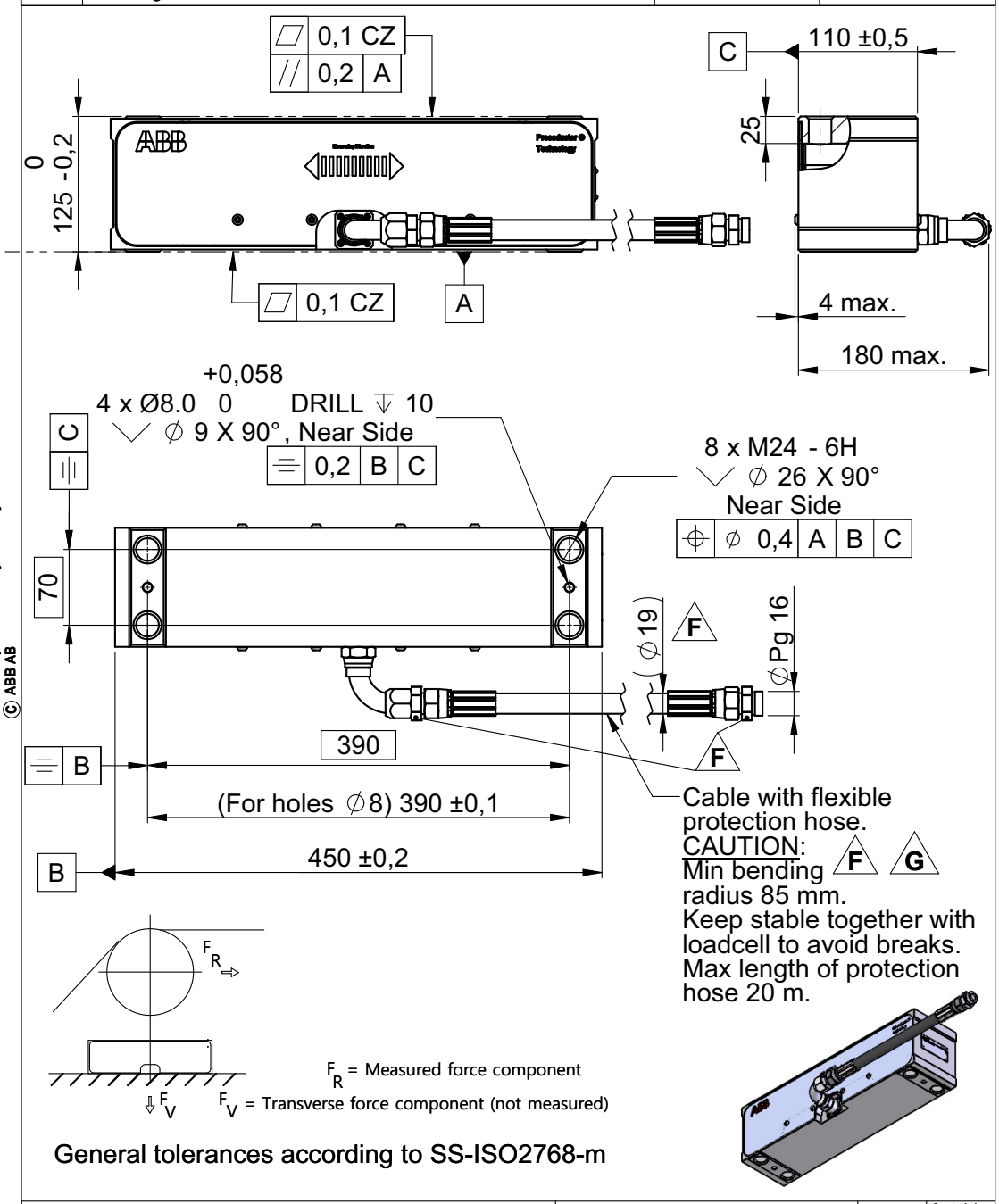

We reserve all rights in this document and in the information contained therein. Reproduction, use or disclosure to third parties without express authority is strictly forbidden.
© ABB AB

Prep.	PAMA/FMGF	Lars Hinders	2023-02-23	CAD outline drawing			Cont.sh./ No of sh.
Appr.	PAMA/FMGF	Håkan F Wintzell	2023-02-24	Load cell PFTL 201CE			1
Resp.dept	PAMA/FMOE			Lastcell PFTL 201CE			
ABB	ABB AB			Document number 3BSE008724	Lang. en	Rev. G	Sheet 1
Product family : LPBT				Project or order number :			

Document status: Approved

G.14 Dimension Drawing, 3BSE008905, Rev. G

REV	DESCRIPTION	DATE	DEPT./INIT.
F	Redrawn and uppdated in Solid Works. Previous revision table removed, exist on revision E.	2012-01-24	PA/FM/GF/LEN
G	Adapter for hose added. Ø19 was Ø25 and radius 85 was 150	2017-01-12	IAMA/OE/SF

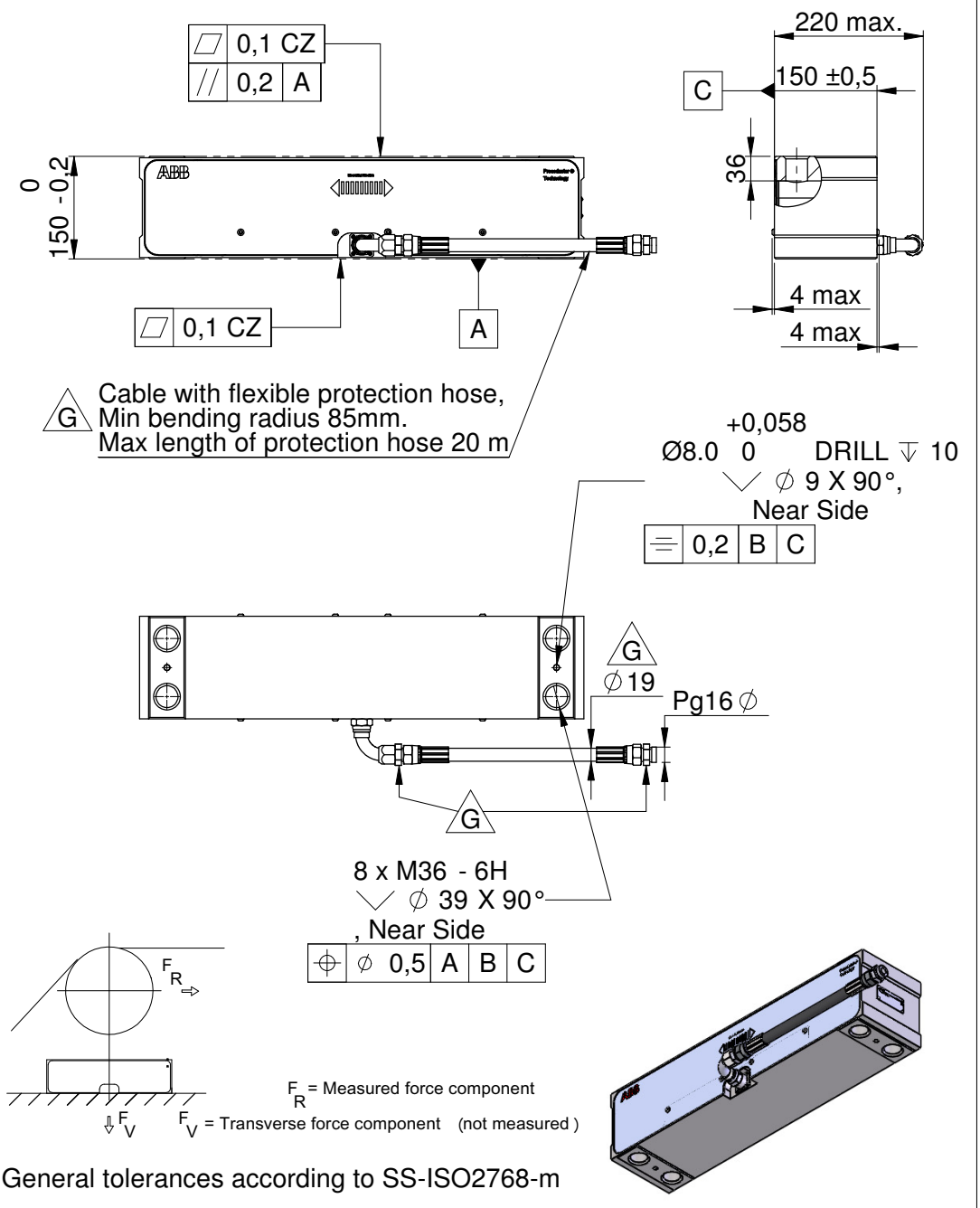

General tolerances according to SS-ISO2768-m

Prep.	IAMA /OE	Sven Fischer	2017-01-12	CAD outline drawing			Cont.sh./ No of sh.
Appr.	IAMA /OE	Jan-Olov Skogqvist	2017-01-16	Load Cell PFTL201-DE			1
Resp.dept	IAMA /FMOE			Lastcell PFTL201-DE			
ABB	ABB AB			Document number 3BSE008905	Lang. en	Rev. G	Sheet 1

Product family : 661130 Bansp.mätare VPBT/HPBT

Project or order number :

Document status: Approved

We reserve all rights in this document and in the information contained therein. Reproduction, use or disclosure to third parties without express authority is strictly forbidden. © ABB AB

G.15 Dimension Drawing, 3BSE008917, Rev. H

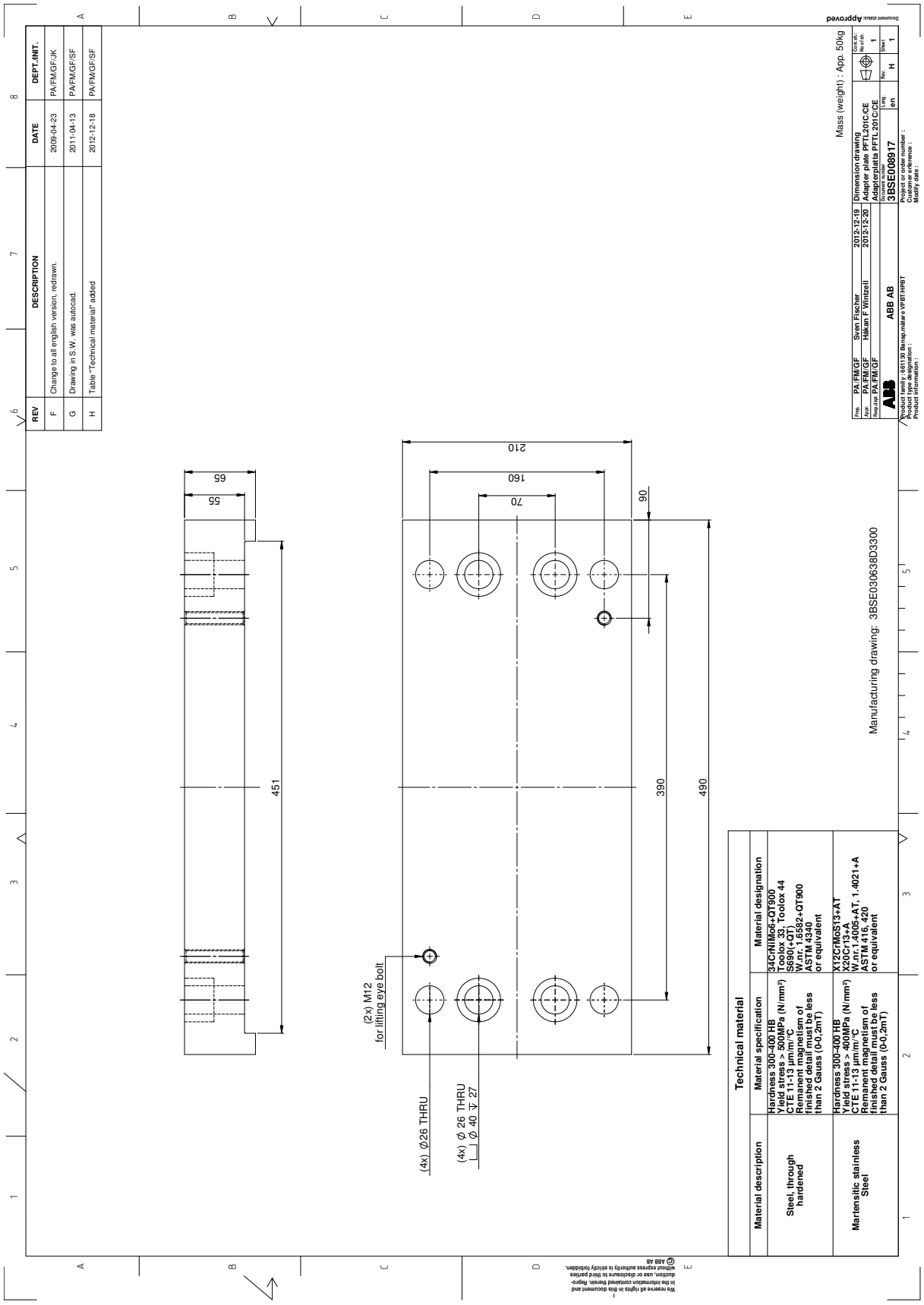

G.16 Dimension Drawing, 3BSE008918, Rev. G

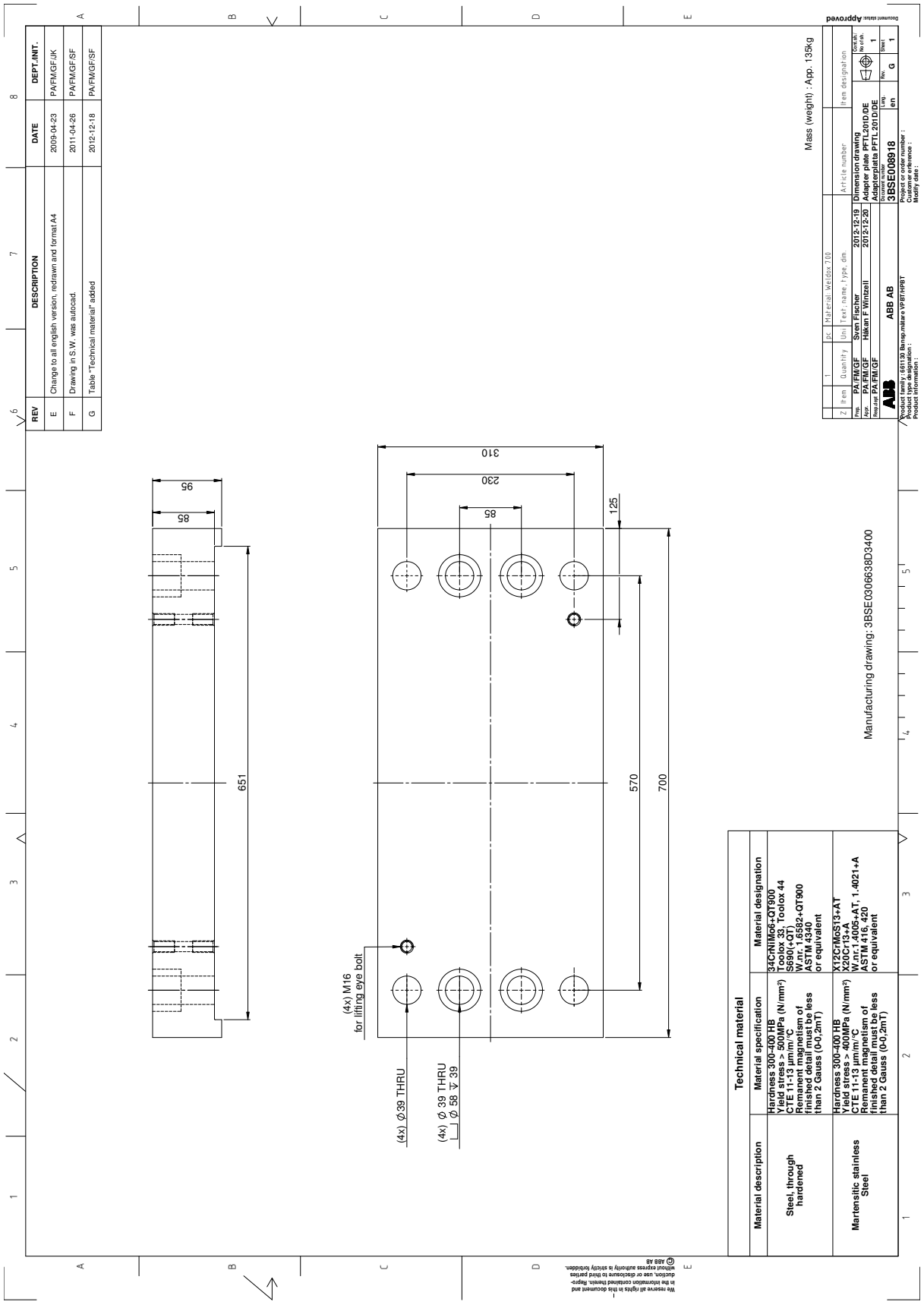

Appendix H Actual Data and Settings at Commissioning

H.1 Document the Commissioning in this Form

Fill in actual data and settings to document the commissioning.

Data and Settings	PFEA111	PFEA112	PFEA122	Unit
Display language				
Display unit				N, kN, kg, lbs, N/m, kN/m, kg/m, pli
Web width				m, inch
Object type (Load cells per roll)	Standard roll (2 load cells)	Standard roll (2 load cells)	Standard roll (2 load cells)	
	Single side A/B (1 load cell)	Single side A/B (1 load cell)	Single side A/B (1 load cell)	
Load cell nominal load				kN, lbs
Set wrap gain				
- Wrap gain*				
Voltage output				
- Filter settings				ms
- High Tension				N, kN, kg, lbs, N/m, kN/m, kg/m, pli
- High Output				V
- Low Tension				N, kN, kg, lbs, N/m, kN/m, kg/m, pli
- Low Output				V
- High Limit				V
- Low Limit				V
Current output				
- Filter settings				ms
- High Tension				N, kN, kg, lbs, N/m, kN/m, kg/m, pli
- High Output				mA
- Low Tension				N, kN, kg, lbs, N/m, kN/m, kg/m, pli
- Low Output				mA
- High Limit				mA

Data and Settings	PFEA111	PFEA112	PFEA122	Unit
- Low Limit				mA
PROFIBUS				
- Address	-			
- Measuring Range				N, kN, kg, lbs, N/m, kN/m, kg/m, pli
PROFINET				
- Enabled				
- FilterTime	-	-		
- LoadDivision	-	-		

***** If HangWeight has been used at commissioning, go to menu “EnterWrapGain”, read the Wrap gain value calculated by the electronics and fill in this Wrap gain value in the table.

ABB AB
Measurement & Analytics
Force Measurement
Elektronikgatan 35, Bnr 358
SE-721 36 Västerås Sweden
Tel: +46 21 32 50 00
Internet: www.abb.com/webtension

3BSE029380R0201 en Rev A